Magic 1000

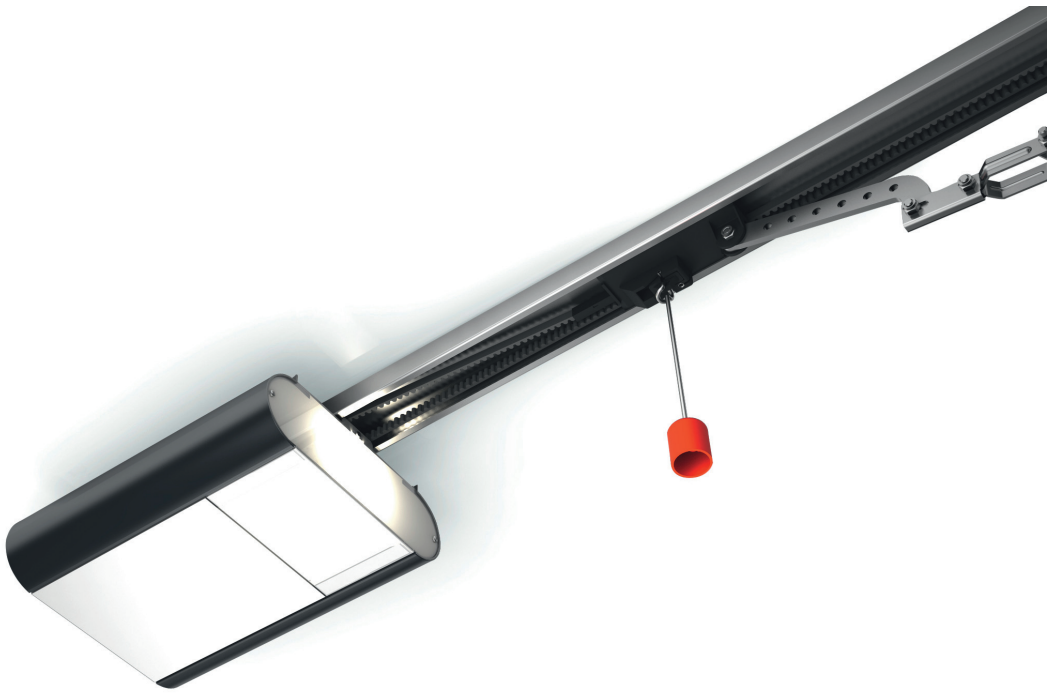

DE Garagentorantrieb
GB Garage door operator
FR Motorisation de porte de garage
SE Portautomatik
DK Garageportmotor
NO Garasjeportåpner
FI Ovikoneisto
NL Garagedeuraandrijving
IT Motorizzazione per garage
HU Garázskapu-hajtómű
RU Привод гаражных ворот
PL Napęd do bram garażowych
SI Pogon za garažna vrata
CZ Pohon garážových vrat
SK Pohon garážových brán
GR Μηχανισμός κίνησης γκαραζόποτρας
ES Accionamiento de la puerta de garaje
PT Automatismo para portões de garagem
BG Задвижване на гаражна врата
HR Pogon garažnih vrata
RO Acționare poartă de garaj
AE نظام تحريك بوابات الجراجات

N000925 12/2010

GB English

Translation of the German original operating manual

Table of contents

1 Introduction 8
2 Product description 8
3 Symbols 8
4 Intended usage, Guarantee 8
5 Informal Safety Measures 8
6 Safety instructions 8
7 Installation precautions 9
8 Safety devices of the door operator 9
9 Safety inspection 9
Checking load switch-off
Emergency release
Additional safety devices
10 Controls and indicators 9
11 Connections 9
12 Installation preparations 10
13 Installation 10
14 Commissioning 10
15 Teaching in the door operator 10
Teaching in with a remote transmitter
Teaching in without a remote transmitter
16 Teaching in/deleting a remote transmitter 10
17 Operation 11
18 Programming 11
19 Reset 12
20 Attaching additional safety devices 12
Photo cell
EMERGENCY stop
21 Additional connections 12
Additional lighting
External pulse input
Additional antenna
22 Troubleshooting 13
Causes of errors/Remedies
Display / check radio level
Changing the battery of the remote transmitter
23 Maintenance intervals 14
24 Declaration of conformity 14
25 Technical data 14
26 Replacement parts 14
27 Accessories (optional) 14
28 Removal, Disposal 14

1 Introduction

Read operating instructions carefully before installing and commissioning. Pay attention to the illustrations and all notes.

2 Product description

The remote transmitter supplied is taught in to the door operator.

Packaging: Only reusable materials are used. Dispose of packaging in an environmentally-friendly way and according to local legal guidelines.

Scope of delivery see page 169

3 Symbols

The following symbols are used in this manual:

⚠ **CAUTION** Warns of potential injury and material damage. Non-observance of instructions marked with these symbols can result in serious injuries and material damage.

➡ **NOTE**: Important technical instructions that must be observed.

4 Intended usage, Guarantee

This door operator is suitable for use in domestic garages. Any other use is deemed incorrect.

This product must not be used in explosion-protected atmospheres.

The manufacturer must provide written and express approval for:

- Modifications or attachments
- Use of parts other than factory authorised replacement parts
- Repairs performed by persons or businesses that have not been authorised by the manufacturer.

If approval is not obtained for any of the above, this may invalidate the product's guarantee.

We will not be liable for damage

- Due to non-compliance with operating instructions
- Due to technical errors in connecting the door operator and structural deformations that may occur during operation
- As a result of inappropriate door maintenance.

door maintenance.

5 Informal Safety Measures

Keep the operating instructions handy for future use.

The inspection and testing log book provided must be filled out by the person carrying out the installation and kept by the operator along with all other documentation (door, door operator).

6 Safety instructions

⚠ **General safety instructions**

The door operator may only be used if the entire range of motion is clearly visible. Be mindful of others within the action range of this product during operation.

Always disconnect the electrical power before working on the door operator.

Actions prohibited during use of a door operator:

- Passing or driving underneath a moving door
- Lifting of objects and/or persons with the door
- Children must not be left to operate the product unsupervised; it is not a toy.

The door must only be operated when

- all users are familiar with its functions and operation.
- the door meets the requirements of European standards EN 12604, EN 12605 and DIN EN 13241-1.
- the door operator is installed in compliance with the relevant standards (EN 12453, EN 12445 and EN 12635).
- any optional safety devices such as a photo cell, optosensor or safety rail are fully functional.
- garages without a second entrance have an emergency lock release from the outside. It may be ordered separately if necessary.
- an inset door in the garage door is closed and is equipped with a safety device that prevents activation when the door is open.
- an additional safety device (safety rail, etc.) has been installed prior to activation of the automatic closure function.
- If a person with restricted physical, sensory or mental capacity, or a person with little experience and/or

knowledge of the door operator is to use the device, they must be supervised by a person who assumes responsibility for their safety.

7 Installation precautions

Installation must be performed by qualified service technician.

Work on the electrical installation must only be carried out by authorised specialist personnel.

The load capacity and suitability of the supporting construction of the building in which the door operator is to be installed must be inspected and approved by an expert.

The door operator must be fully and securely attached at all fastening points. All fastening materials must be selected according to the nature of the supporting construction and they must be able to withstand traction force of 900 N.

⚠ In the event of non-conformance with these requirements, there is a risk of injury and material damage caused by a falling operator or an uncontrolled movement of the door.

When drilling the fastening holes, do not damage the building structure or any electrical, water or other lines.

After lifting up the door operator to the ceiling, fasten it fully with appropriate tools to prevent it from falling down. See illustration on page 166.

Please observe appropriate industrial safety regulations and keep children away during installation.

8 Safety devices of the door operator

⚠ The door operator has the following safety devices. Do not remove them or alter their functionality.

- Automatic load switch-off during functions "OPEN" and "CLOSE"
- Connection for photo cell / safety rail / optosensor
- EMERGENCY stop connection: Connection of a switch (optional) to an inset door mounted in the garage door, for example
- Emergency release (see page 168 (J))

9 Safety inspection

Checking load switch-off

The automatic load switch-off is a clamping and safety mechanism that is designed to prevent accidents due to a moving door.

Stop the door from outside with both hands at waist height.

When closing:

The door must stop automatically and reverse a little if it comes into contact with an obstruction.

When opening:

The door must stop automatically when it meets with resistance (if menu A7 = 001, it moves back a short distance).

After load switch-off, the door operator lights flash until the next pulse or wireless command is received.

Emergency release

Check as per the information provided on page 168 (J).

Additional safety devices

Check for proper functioning as per the manufacturer's instructions.

10 Controls and indicators

5	Pushbutton *Close door / Minus*
6	Pushbutton *Menu / Confirm (Teach-in run)*
7	Pushbutton *Open door / Plus*
8	Indicator lamp

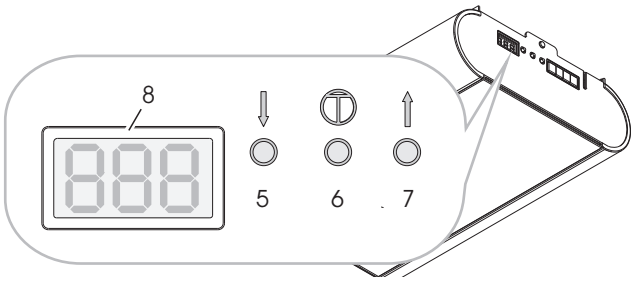

Messages of the indicator lamp (8)

Status messages

A door in end position OPEN
B door between the two end positions
C door in end position CLOSED

Status messages

During door movement in OPEN direction
C => **B** => **A...**

During door movement in CLOSE direction
A => **B** => **C...**

L4 Set end position OPEN
L3 Reference run CLOSE and set end position CLOSED
L2 Teach-in run OPEN (load values)
L1 Teach-in run CLOSE (load values)
Err Error and error number (flashing)

11 Connections

1	EMERGENCY stop (green)
2	Photo cell (yellow)
3	Function programmable, see Chapter 18, C4
4	

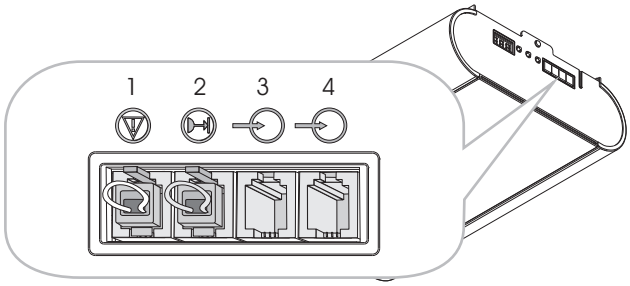

12 Installation preparations

Please note: Check that the door is working properly and running smoothly, and adjust if necessary. The spring tension of the door must be set in such a way that it is stable and can be opened and closed by hand smoothly and without jolting.

- Standard and appropriate shock-proof socket approx. 10 - 50 cm away from the fastening position for the head of the operator.
  (For information on fuses, see the technical data.)
- Only install the door operator in dry garages.

Make sure the installation set for the connection is ready on the door type that is being attached and/or install it according to the relevant manual.

13 Installation

See instructions for installation on page ff 162.

The head of the operator can be turned by 90° to the rail runner respectively as required (see page 162 (A)).

Installation step D, page 163:

1. Tighten the toothed belt's clamping nut until the toothed belt no longer rests on the guide rail (equivalent to dimension X).
2. Use the clamping nut (dimension B) to increase the toothed belt tension to correspond to the length of the door operator.

Installation step G, page 165, installation dimensions:

Overhead Sectional Doors

Low lintel	Dimension G	Fig.
Euro	30 - 50mm	G2
G60	20 - 40mm	G3
G60 Max	30 - 50mm	G1
Normal lintel		
Euro	100 - 120mm	G2
G60	100 - 120mm	G3
G60 Max	100 - 120mm	G1

One-Piece-Door	20 - 40mm	G4

14 Commissioning

Once installation is complete

- Slowly open the door by hand until you hear the slide snap in.
- Connect to mains, display shows L4 and the door operator lamp flashes at intervals of 4.
- Teach in the door operator (see Chapter 15).
- Teach in the remote transmitter (see Chapter 16).
- Carry out a safety inspection (see Chapter 9).

15 Teaching in the door operator

ATTENTION: No protection is provided by the load switch-off whilst the door operator is being taught in.

Note: Teaching in is only possible during initial installation or after resetting the door operator. Do not press any keys during the teach-in procedure.

Preparation: Connect the door to the door operator.

Teaching in with a remote transmitter

At the time of delivery and after resetting the door operator, the remote transmitter supports the following functions:

- A Safety control operation and fine adjustment "OPEN"
- B Safety control operation and fine adjustment "CLOSE"
- C and D Confirmation (storage)

Once the door operator has been taught in, key A is used for remote control and the other keys can be used to control other similar door operators or other radio receivers.

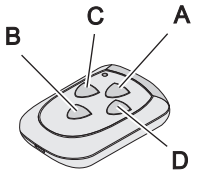

Teaching in

- Press and hold down key A; the door moves in the open direction.
- When you reach the desired *end position "OPEN"*, release key A. (You can make corrections with key B.)
- Press key C once briefly, teach-in procedure: The door operator automatically stores *"End position OPEN/CLOSE"* and the loads of the *"Travel path OPEN/CLOSE"*. The door operator lights flash in synchronism.

Teach-in is complete when the door is open and the door operator lights are on.

Check load switch-off according to Chapter 9,Safety inspection.

Teaching in without a remote transmitter

On the door operator:

- Press and hold pushbutton ⇧ and the door moves in the open direction. Release pushbutton when the desired opening position is reached. A correction can be made with the pushbutton ⇩ .
- Press the Menu pushbutton Ⓣ , the door operator automatically stores *"End position OPEN/CLOSE"* and the loads of the *"Travel path OPEN/CLOSE"* . The door operator lights flash in synchronism.

Teach-in is complete when the door is open and the door operator lights are on.

Check load switch-off according to Chapter 9,Safety inspection.

16 Teaching in/deleting a remote transmitter

Programming the remote transmitter:

During one of the 3 status messages A, B or C (seeChapter 10), press the pushbuttons ⇧ and ⇩ simultaneously (approx. 1 s), F0 flashes in the display.

Select the desired function with the pushbuttons ⇧ and ⇩ .

Functions

F0 OPEN / Stop / CLOSE
F1 OPEN / Stop / OPEN
F2 CLOSE / Stop / CLOSE
F3 Stop
F4 Partial opening
F5 Light ON (restart light time)
F6 Light ON / OFF
F7 OPEN
F8 Close

Press the desired key on the remote transmitter, the radio command is taught in.

Note: The number of the function is shown in the display during the transmission pulse.

Deleting (all) remote transmitter(s):
During one of the 3 status messages A, B or C (seeChapter 10), press the pushbuttons ⇧ and ⇩ simultaneously for >6 seconds, FL flashes in the display. The status message reappears after 3 seconds.

17 Operation

⚠ **CAUTION**: Mishandling the product can result in injuries or material damage. Follow the basic safety rules:
When opening or closing the door, do not block the interior or exterior swivel ranges. Keep children away.
The door movements can be activated or stopped using the remote transmitter provided or via switching elements such as the wall keypad, which can be connected if desired.
Optional external features (such as the EMERGENCY STOP) can also be connected to the door operator.

➡ ***The operator must be connected to a door before it is used. If it is not, incorrect load values will be taught in to the electronic system. This can cause malfunctions.***

18 Programming

Switch on programming mode
During one of the 3 status messages A, B or C (seeChapter 10) press the Menu pusbutton Ⓣ for longer than 1.5 seconds. The display changes to the menu (D).

Select programming menu
Select the desired menu with the pushbuttons ⇧ and ⇩ .

Show / change menu value
Displays: Press the Menu pushbutton Ⓣ for less than 1.5 seconds, the menu value (E) is displayed.
Change: Change the value with the pushbuttons ⇧ and ⇩ .
Save: Press the Menu pushbutton Ⓣ for less than 1.5 seconds, the programming menu (D) is displayed.

Exit programming mode
Press the Menu pushbutton Ⓣ for longer than 1.5 seconds, the display changes to the status message, changes are saved.

If no key is pressed within 15 seconds during programming, it automatically exits the programming mode.

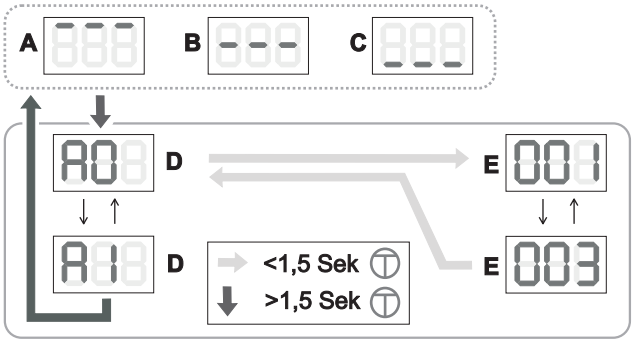

⚠ **ATTENTION: If the values of the programming menu A0 to A4 are changed, the load switch-off no longer provides any protection!** Teach the door operator in again before re-commissioning. For this carry out *Teaching in the door operator (Chapter 15)* .

Menu ⬇	Function, setting range, unit	Factory setting ⬇
A0	Length SOFT RUN OPEN in 7cm 000..009	002
A1	Length SOFT RUN CLOSE in 7cm 000..009	004
A2	Soft running speed (CLOSE) mm/s 000= 50...009= 140	005
A3	Backjump, OFF= 000 ON= 001	001
A4	Change in direction, OFF= 000 ON= 001 Setting (with +/-) only possible if EMERGENCY STOP plug (1, green) is unplugged.	000
A5	Added load OPEN [1)] 000..009	003
A6	Added load CLOSE [1)] 000..009	003
A7	Door type: Overhead sectional door/one-piece door = 000 Side sectional door* = 001 Side sectional door with soft start = 002 * Obstruction release also in OPEN direction	000
A8	Warning time (OPEN/CLOSE) 001=2sec... 008=16sec	000
A9	Accessory card 000= ZKMagicS 001= ZKMagic	000
b0	**Relay 1 (with ZKMagic accessory card)** 000= no function 001= E-lock 002= warning light * 002= photo cell test* (interruption transmitter voltage) 004= status display*: Door in end position OPEN 005= status display*: Door in end position CLOSED 006= green light* 007= red light* * if A9= 001	**000**
b1	**Relay 2 (with ZKMagic accessory card)** 000= no function 001= E-lock* 002= warning light * 002= photo cell test* (interruption transmitter voltage) 004= status display*: Door in end position OPEN 005= status display*: Door in end position CLOSED 006= green light* 007= red light* * if A9= 001	**000**
b2	**Closing edge protection, for accessory card ZKMagic and if A9= 001** 000= OFF 001= OSE 002= 8k2	**000**
b3	Empty run detection 000= OFF 001= ON	001
b4	Automatic closing[1)]*, secs. and min. 000= OFF 001.0.010 keep-open time secs.* (001 = 5secs... 010 = 50secs) 011..040 keep-open time min* (011=1min... 040=30min) * plus warning time * only active if door was fully opened	000
b6	Maintenance interval 000= OFF 001..009 (1,000 door movements) Example: 005 = 5,000 door movements The operator lighting flashes after every door movement when the maintenance interval has run out. A misadjustment resets the counter of the maintenance interval.	000

b7	Version number Each of the digit positions (0-7) is displayed in turn. The example shows: Version: 04 Date: 20.05.10 Select the position with the pushbuttons ⇧ and ⇩ .	
b8	Service mode 000= control panel free, menu items adjustable 001= control panel locked, menu items not adjustable 002= data output (accessory card) Setting only possible if EMERGENCY STOP plug (1, green) and photo cell (2, yellow) are unplugged.	000
b9	Run counter (not adjustable) Each of the digit positions (0-5) is displayed one after another. The example shows the value 8,000 Select the position with the pushbuttons ⇧ and ⇩ .	
C0	Test mode for Magic-Door-Control (option) Radio signal, maximum 15 seconds: 000= no signal 001= end position OPEN 002= end position CLOSED 003= run open 004= run close 005= standstill underway 007= error 008= obstruction	000
C1	Automatic closing from partial opening [1)] secs and mins 000= OFF 001.010 keep-open time secs.* (001 = 5secs... 010 = 50secs) 011..040 keep-open time min* (011=1min... 040=30min) * plus warning time	000
C2	Partial opening in 5cm steps 000..100	020
C3	Lighting time, after motor running 000..060 (10sec. steps)	012
C4	Close after leaving the photo cell, 000..0.019, 0.5 s	000
C5	EMERGENCY stop input 000= automatic closing after EMERGENCY STOP locked 001= closing time starts again after release EMERGENCY stop	000
C6	Function connections	000

	Connection 3	Connection 4
000	⇧ STOP ⇩ STOP	Partial opening
001	⇧ STOP ⇩ STOP	⇧ STOP ⇩ STOP
002	⇧ STOP ⇧ STOP	⇩ STOP ⇩ STOP
003	⇧	⇩

⇧ OPEN

⇩ CLOSE

STOP Stop

C7	PARKING ASSISTANT operator light flashes when door can be closed 000= OFF 001= ON (only in connection with photo cell)	000

⚠ [1)] If the added load (A5, A6) is >003 and/or the automatic closing (b4, c1) is set to ON (>000), the door may only be operated with an additional safety device.

19 Reset

⚠ **ATTENTION: There is no longer any protection by switching off the load after the reset.** Teach the door operator in again before re-commissioning. For this carry out *Teaching in the door operator (Chapter 15)* .

Reset (saved values of the teach-in runs)

During one of the 3 status messages A, B or C (see Chapter 10) press the pushbuttons ⇧ and Menu ⓣ simultaneously for longer than 8 seconds and less than 10 seconds. The indicator lamp flashes(*rES)*, then the status message is displayed; the reset is carried out.
The remote transmitters are not deleted.

Reset, factory setting

- Pull out the plug (1).
- During one of the 3 status messages A, B or C (see 10) press the pushbuttons ⇧ and Menu ⓣ simultaneously for longer than 12 seconds. The indicator lamp flashes slowly at first, then quicker (*rES).* Then the status display reappears, the reset is made.
  The values shown under *Programming (Chapter 18)* are set. The remote transmitters are not reset.

20 Attaching additional safety devices

Photo cell

Function: When the safety input is activated (opening the contact) the operator stops and reverses as far as the OPEN end position.
If the “automatic closure” function is also activated, following the third successive obstruction message, the operator will move to the OPEN end position and shut down.

Connection: Pull out plug with yellow bridge on the external junction 2 and store it. Plug on safety device.

Safety rail, opto-sensor and **warning light** are connected by extension modules.

EMERGENCY stop

Function: If the external safety device is operated when the door is moving (Contact opened), the door stops immediately. Once the EMERGENCY stop contact has closed, the door operator can be moved again with the next pulse.
Connection: Pull out plug with green bridge on the external junction 5 and store it. Plug on safety device.

21 Additional connections

Additional lighting

Connection must be performed only by qualified electricians. In addition to the operator light (40W), optional lighting of a maximum of 60 W (no tubular fluorescent lamps) can be connected to terminals 1 and 2.
Note: Some energy-saving lamps can interfere with the radio signal.

External pulse input

An external pulse signal (e.g. wall button) can be connected to terminals 14 and 15.

Additional antenna

An external antenna can be connected to terminals 17 and 16 (GND). The internal antenna (terminal 17) must be disconnected.

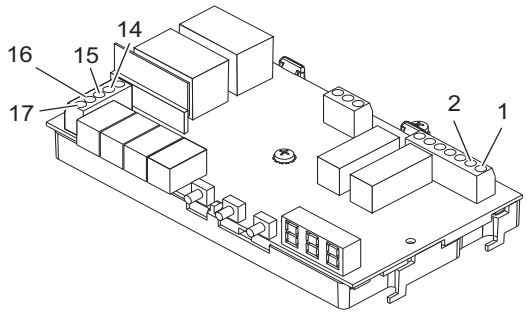

Figure: Control board See also page 171.

22 Troubleshooting

Interference frequencies

The wireless signals of other 433 MHz transmitters can interfere with the door operator.

Self-test

The system runs a self-test after initialisation, after each motor operation and after every 2.25 hours in idle mode. Error free = status message.

Error messages*

002	EEprom data
003	Current measurement
004	Hardware Photo cell
005	Switch off thyristors
006	Switch off relay
007	Watchdog test
008	ROM test
009	RAM test
010	SD test

Troubleshooting: Reset (Chapter 19) and then perform work step *Teaching in the door operator (Chapter 15)*.
If the error occurs again, request customer service.

Note: If the same error occurs in two successive self-tests, the control system will be disabled (commands are rejected). After approximately one further minute, the system runs another self-test. If no errors are detected, the control system is enabled again. If the error persists, a reset will need to be performed. This will delete all settings and the door operator will have to be taught in again.

Causes of errors/Remedies

Description	Possible cause/Remedy
Door operator light flashes evenly	The door has hit an obstruction, do function test
Door operator light flashes at intervals of 4	Door operator is not taught in, attention no protection by load switch-off! Carry out door operator *Teaching in the door operator (Chapter 15)*
Entrapment protection device not working.	Incorrect setting of door or entrapment protection device / Reset and teach in again
The operator is not working at all.	None or wrong voltage supply / The fuse of the motor control is defective / Check external terminals 7 and 8.
The operator is defective.	The slides are not snapped-in properly./The toothed belts are not tensioned correctly./The door thresholds are frozen.
Operator closes the door slowly (soft start) whilst door operator light flashes	Operator teaches in the travel automatically. After CLOSED end position, moves automatically to OPEN end position. If the door operator light flashes in intervals of 4, carry out*Teaching in the door operator (Chapter 15)*
The operator switches off during motion.	Check that the door is running smoothly and that the entrapment protection device is working properly / Reset / Teach in the door operator
Remote transmitter is not working, LED not alight	Replace the batteries
Remote transmitter is not working	If the function message assigned to the transmission pulse is not displayed whilst the transmitter is actuated (see Chapter 16): Teach in remote transmitter / Poor reception (install optional antenna)
The operator cannot be used via the wall keypad (optional).	Check the wall keypad and control wire.
The operator cannot be used via the remote transmitter (optional).	Radio level too weak. There are interfering radio signals from other transmission sources / Carry out radio level check as described below

Display / check radio level

The signal strength of the received radio signal can be displayed, for this:

- During one of the 3 status messages A, B or C (seeChapter 10), press the pushbuttons ⇧ and ⇩ simultaneously (approx. 1 s), F0 flashes in the display.
- Press the two buttons again simultaneously (approx. 1 sec), the radio level display is activated. x=1 no radio signal ...x=8 high signal strength

The radio level display remains activated until the two buttons are pressed again simultaneously (approx. 1 sec.).

Changing the fuse

⚠ Pull out mains plug.

- Remove the operator hood, see page 171.
- Remove the faulty fuse (S1) from the fuse holder (S2) and replace it. Make sure that the new fuse has the correct value!
- Replace the operator hood.

Restore the mains connection.

Changing the battery of the remote transmitter

Open the housing cover. Remove the battery, fit a new one and replace the housing cover.

➡ Use only leak-proof batteries. Make sure the polarity is correct. Dispose of used batteries in an environmentally-friendly way.

23 Maintenance intervals

Monthly
- Load switch-off (entrapment protection device)
- Emergency lock release
- Additional safety devices (if fitted)

Every 6 months
- Mounting of door operator on the ceiling and on the wall

24 Declaration of conformity

See page 174.
Declaration of incorporation see page 175.

25 Technical data

Mains connection		230 V~, 50/60 Hz
Device fuse		2x 1.6 A, T (slow-blow)
Power consumption at rated load		170 W
Closed current		< 2 W
Degree of protection		For dry rooms only, IP 20 Protection class 1
Wireless remote control		433.92 MHz AM
Remote transmitter range 1)		15 - 50 m
Remote transmitter batteries		CR 2032 (3 V)
Idle speed		~ OPEN >210 mm/s ~ CLOSE >140 mm/s
Traction		1,000 N
Rated load		300 N
Stroke length	Magic 1000	2890 +/- 25 mm
	Magic 1000 long	3978 +/- 25 mm
	Magic 1000 size 3	5066 +/- 25 mm
	Magic 1000 size 4	7242 +/- 25 mm
Total length 3)		615 +/- 25 mm
Total length 2) 3)		485 +/- 25 mm
Width		285 mm
Width 2)		363 mm
Installation height		40 mm
Permissible ambient temperatures		-20°C to 50 °C
Storage		-20°C to 80 °C
Lighting		E14, max. 40 W
Maximum number of duty cycles per hour at rated load		20
Maximum number of duty cycles without a break at rated load		8
Noise level at a distance of 2 m		≤69 dB(A)

1) The transmission range of the remote transmitter may be reduced considerably by external interference.
2) Dimensions with turned operator head
3) plus stroke length

26 Replacement parts

See pages 169 and 170.

27 Accessories (optional)

Available from specialised dealer's:
- 4-command multi-use remote transmitter
- Wall keypad
- Key-operated control
- Keypad
- Wireless keypad
- External antenna
- Photo cell
- Extension module for opto-sensor
- Extension module for warning light
- Emergency lock release from outside or inside
- Safety rail 8.2 kohms
- Potential-free receiver, various frequencies

28 Removal, Disposal

Removing the door operator takes place in the reverse sequence of the installation instructions and must be carried out by qualified technicians. Dispose of the device according to environmental guidelines. Electrical parts must not be disposed of as domestic waste. 2002/96/EG (WEEE)

A

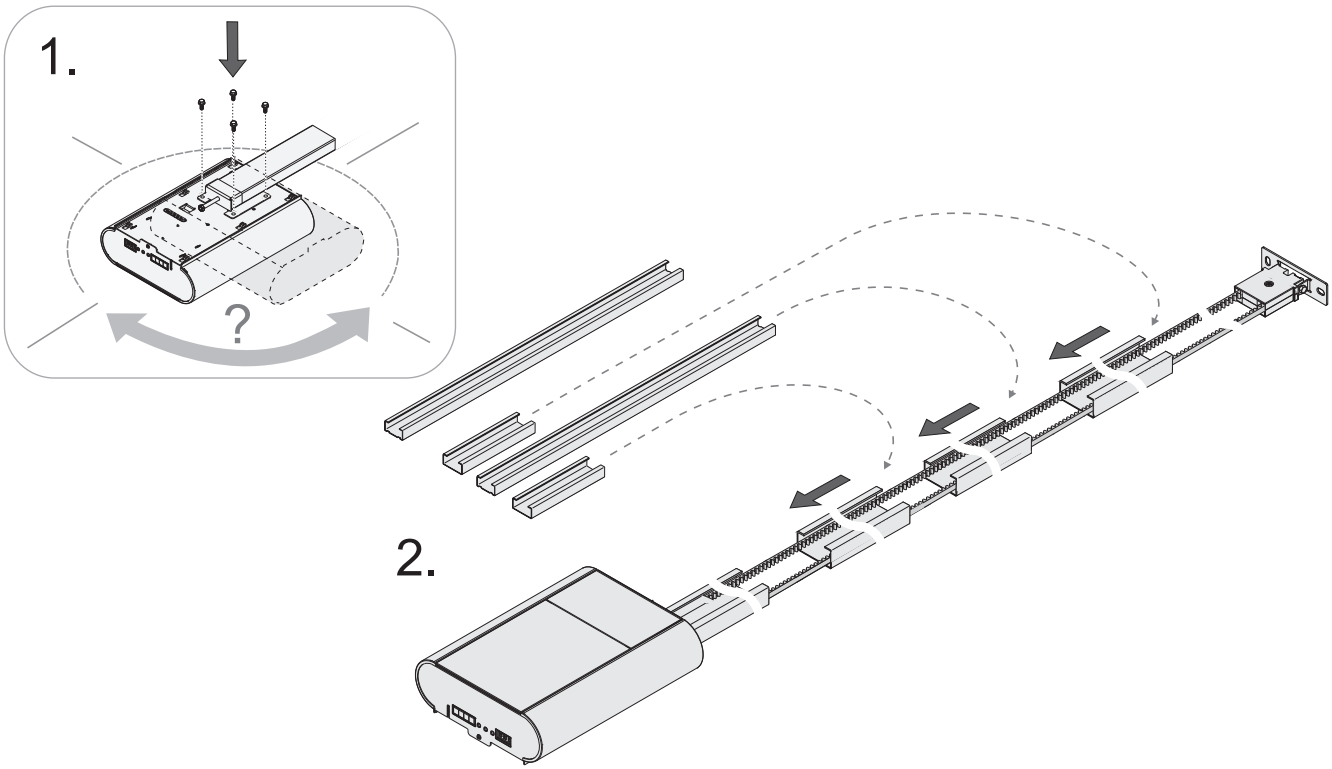

B

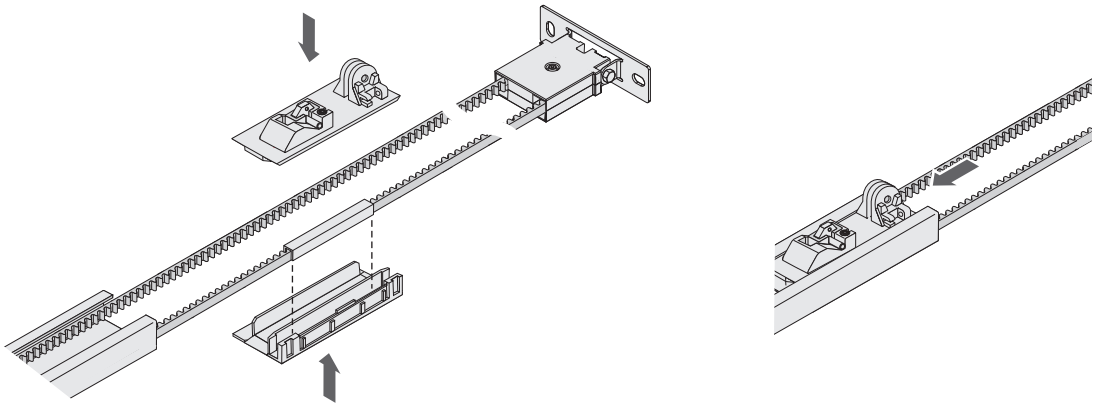

C

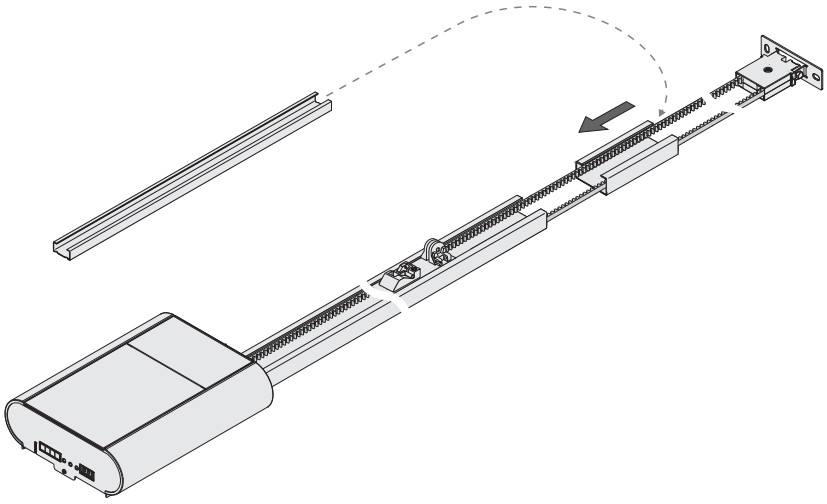

D

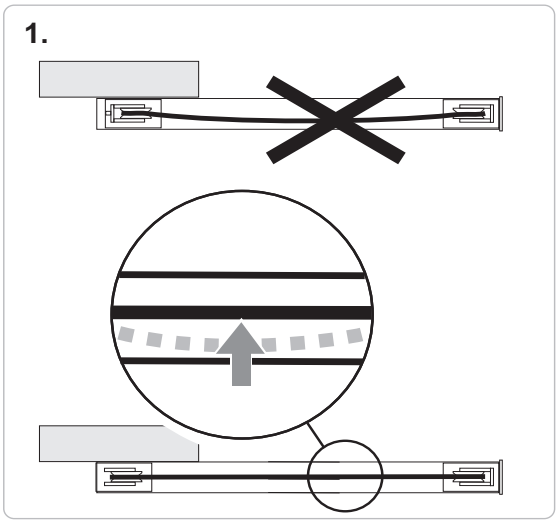

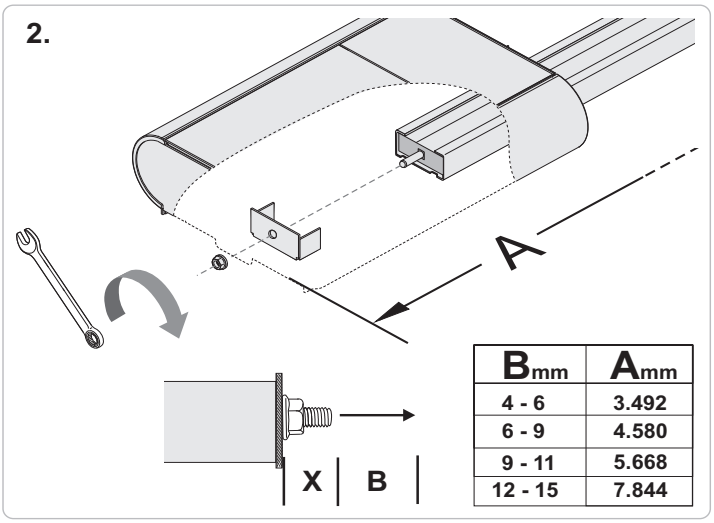

Bmm	Amm
4 - 6	3.492
6 - 9	4.580
9 - 11	5.668
12 - 15	7.844

E

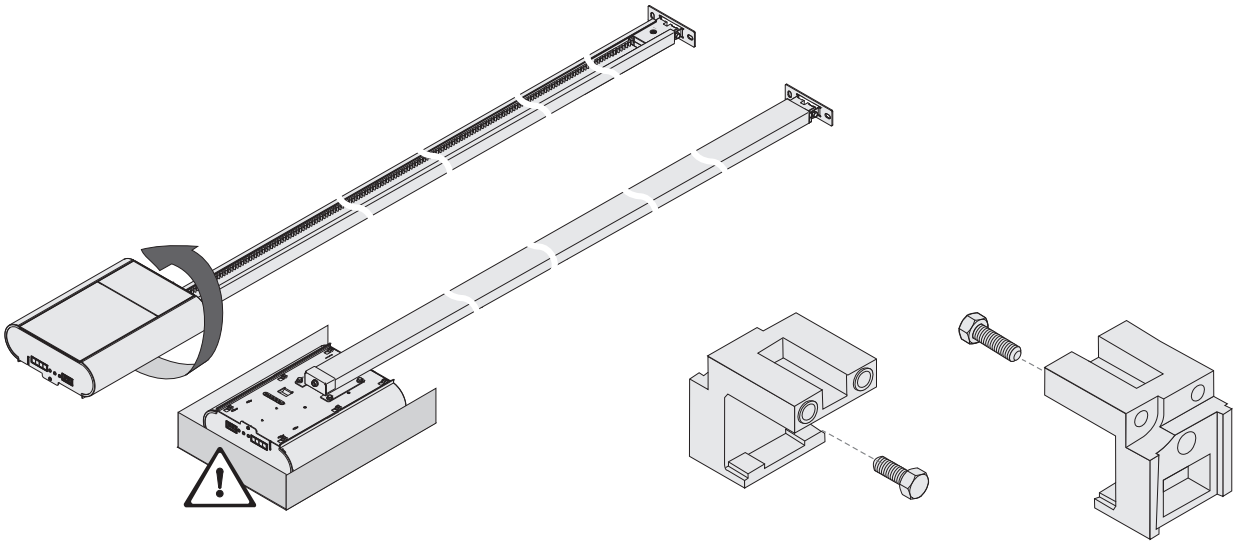

F

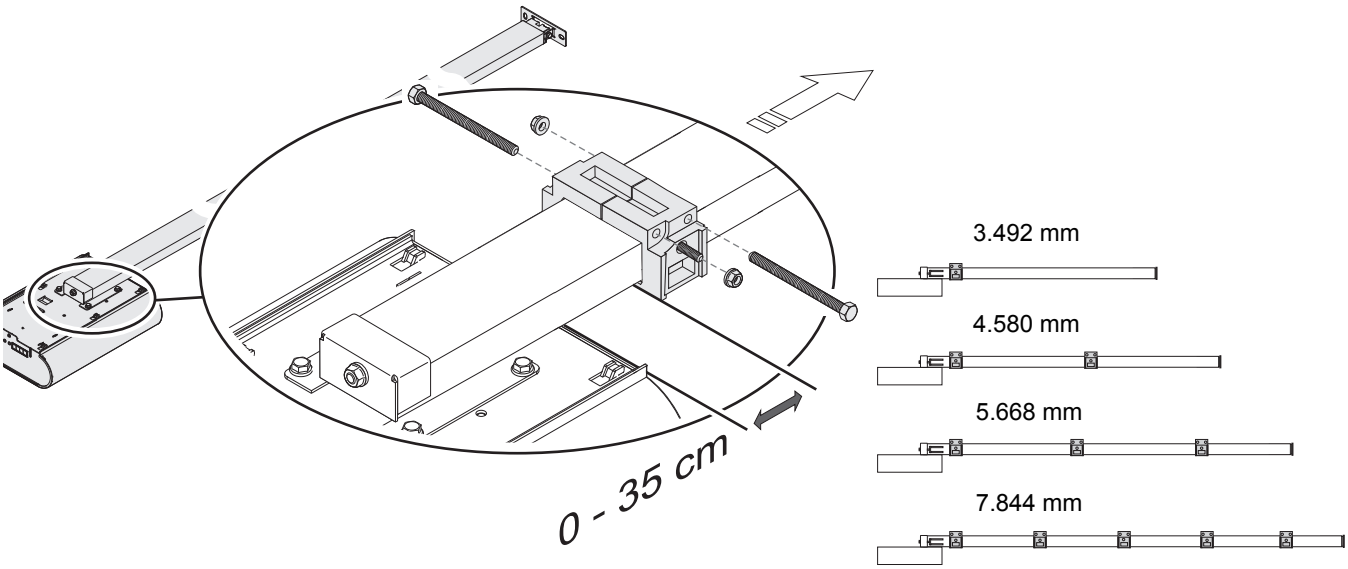

G

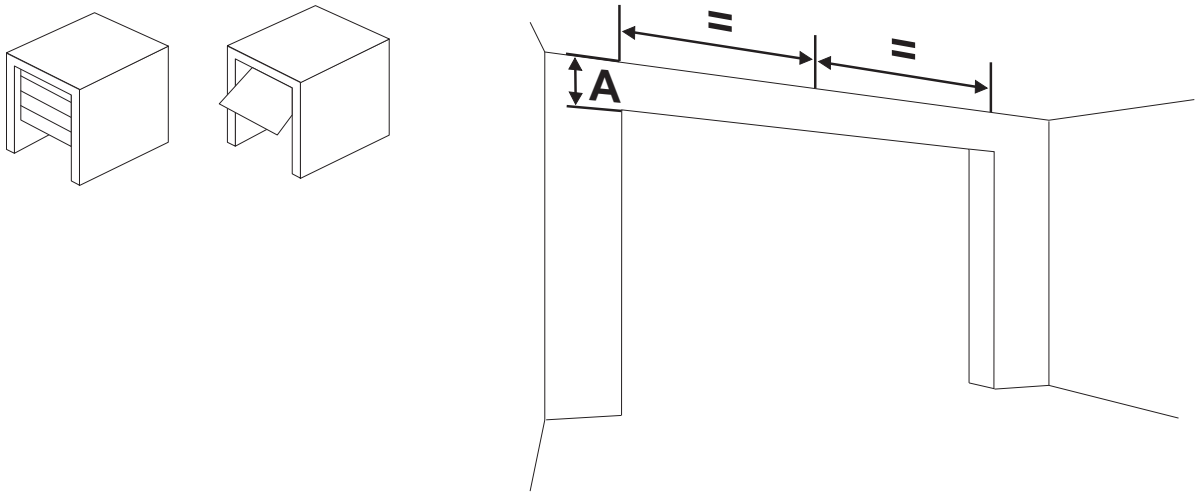

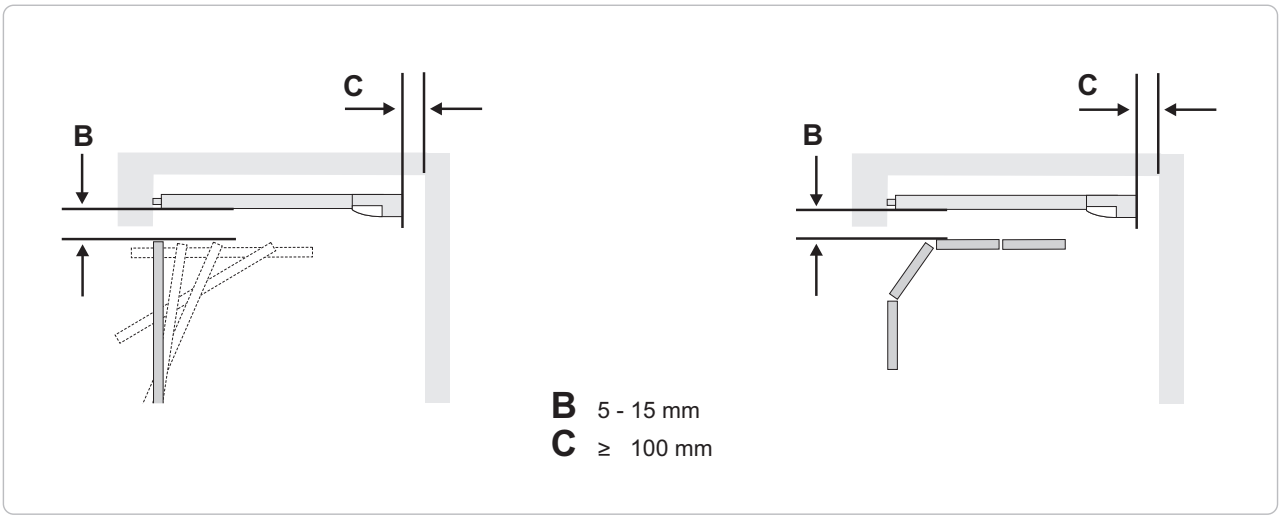

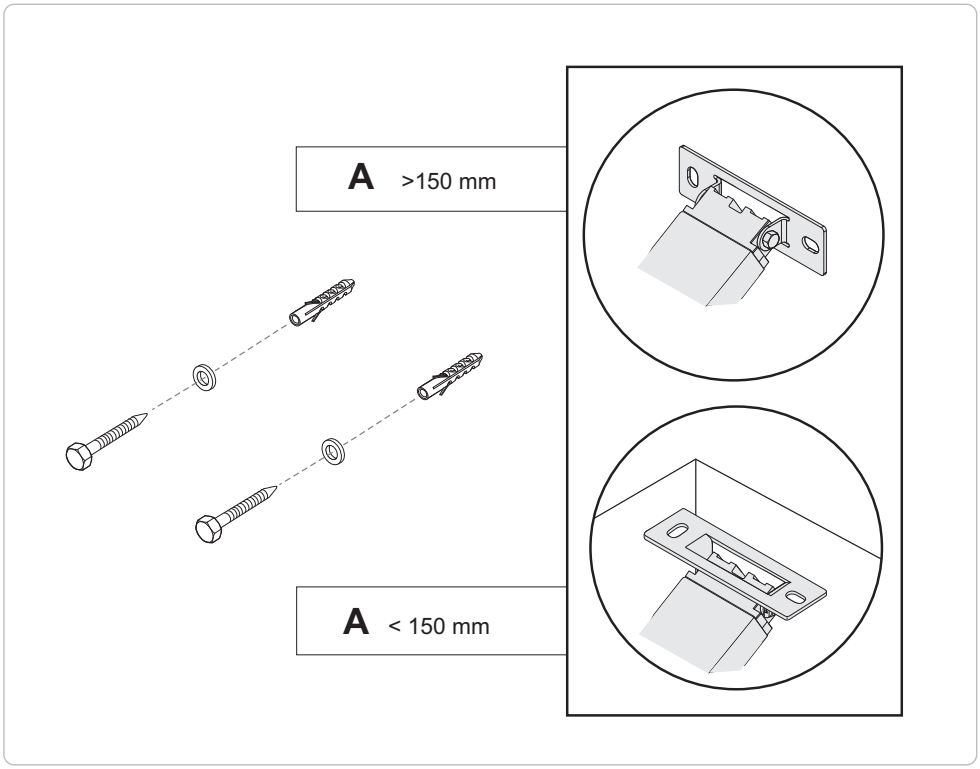

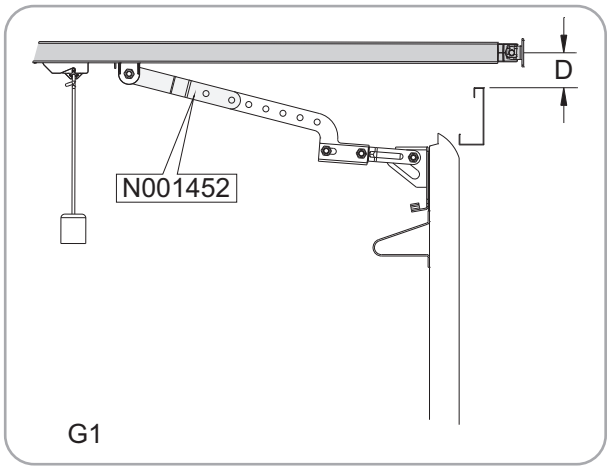

G1

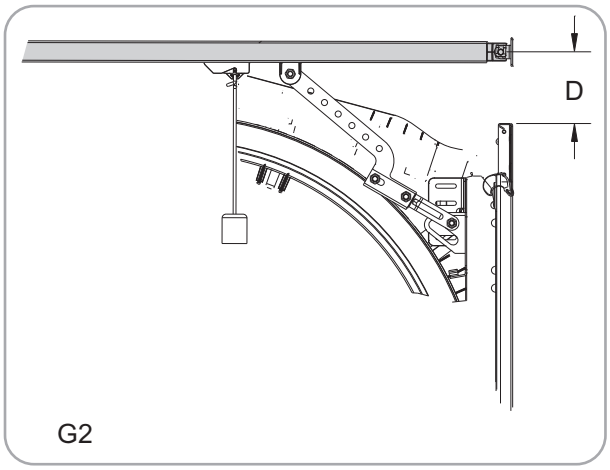

G2

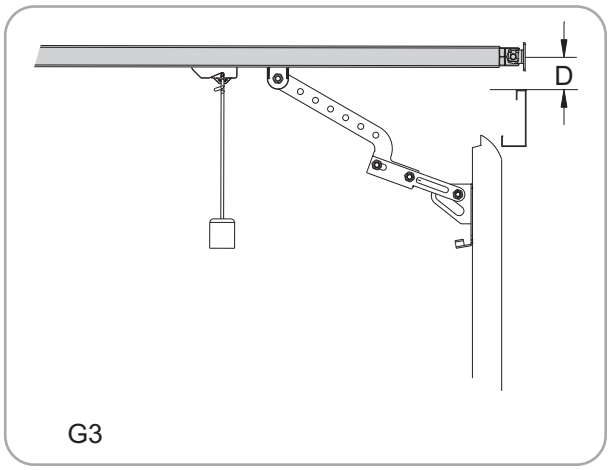

G3

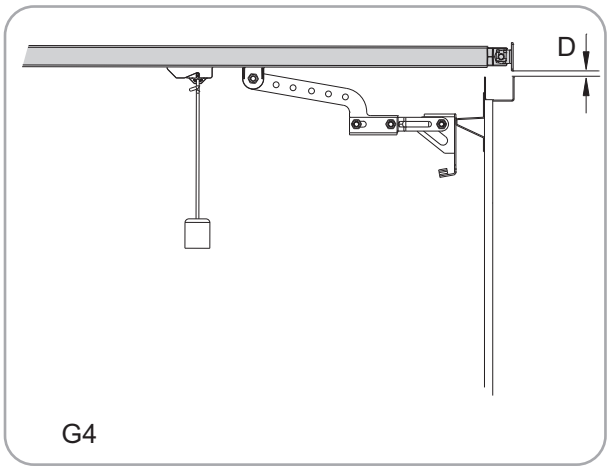

G4

H

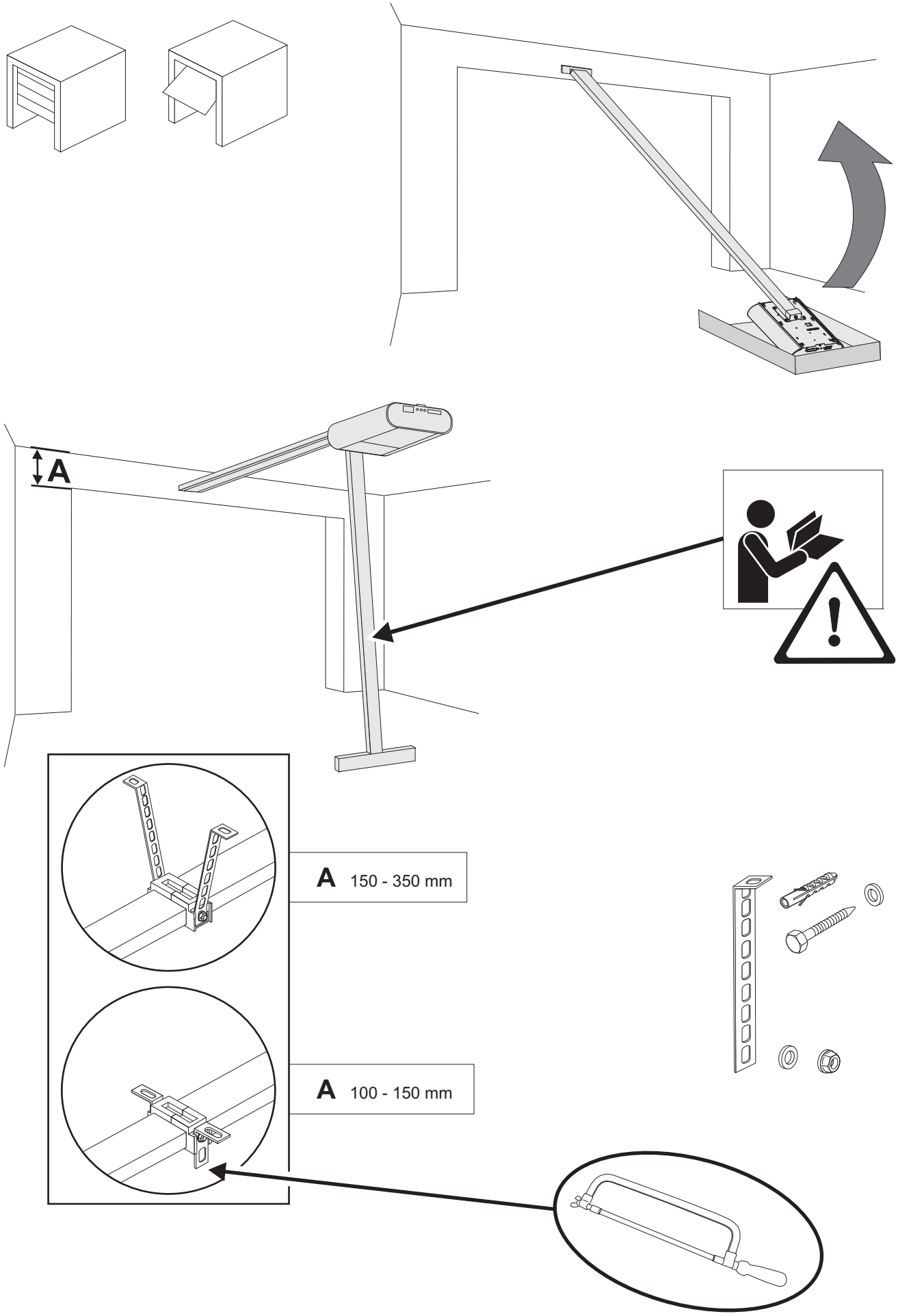

I

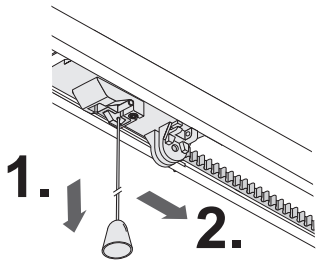

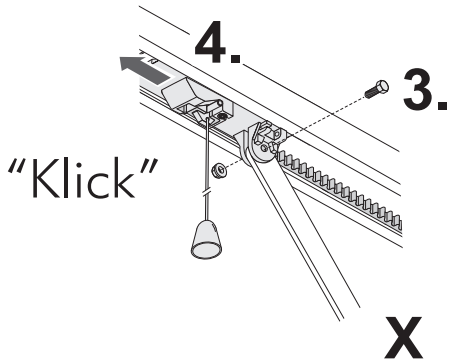

DE	Das zum Tor passende Toranschlussprofil (**X**) montieren. Bei notentriegeltem Tor besteht Gefahr durch ungebremste Torbewegungen.
GB	Install the door connection profile (X) that matches the door. Emergency unlocking of the door creates an unchecked door movement hazard
FR	Monter le profilé de raccordement adapté à la porte (X). Une porte ainsi déverrouillée devient dangereuse : ses mouvements ne sont plus freinés.
SE	Montera den portanslutningsprofil (X) som passar till porten. På nödupplåsta portar finns det risk för att portens rörelser inte bromsas in.
DA	Monter den porttilslutningsprofil (X), som passer til porten. Vær opmærksom på eventuelle fare p.g.a. portens frie bevægelighed når nødudløseren er i brug.
NO	Monter den tilkoblingsprofil (X) som passer til porten. Når porten er frikoblet kan det oppstå fare som følge av ukontrollerte portbevegelser.
FI	Oveen on asennettava sopiva liitäntäprofiili (X). Hätäavaustilanteessa saattaa oven hallitsematon liikkuminen vaarantaa turvallisuuden.
NL	Monteer het bij de deur passende deuraansluitprofiel (X). Bij een in noodgeval ontgrendelde deur bestaat er gevaar door ongeremde deurbewegingen.
IT	Montare il profilo idoneo del raccordo della porta (X). Se la porta è stata aperta azionando lo sblocco d'emergenza, esiste il pericolo che la porta esegua movimenti non frenati.
HU	A kapuhoz illő kapucsatlakozási profilt (X) szereljen fel. Vészkireteszelt kapu esetén veszély áll fenn fékezetlen kapumozgások által.
RU	Установить соответствующии воротам присоединительныи профиль (X). При аварийном отпирании ворот имеется опасность вследствие отсутствия торможения при движении ворот.
PL	Zamontować kształtownik do mocowania bramy (X) pasujący do typu bramy. Jeżeli garaż nie posiada drugiego wejścia, należy zainstalować zewnętrzne otwieranie awaryjne.
SI	Montirajte priključni profil vrat (X) primeren za vrata. Če je odpiralni mehanizem v sili aktiviran, obstaja nevarnost pomikanja vrat brez zaviranja.
CZ	Namontovat pripojovací profil vrat, který se hodí pro vrata. U vrat s nouzovým odblokováním existuje nebezpečí nebrzděnými pohyby vrat.
SK	Namontuje profil pripojenia brány (X) vhodný pre bránu. V prípade núdzového otvorenia brány vzniká nebezpečie nebrzdených pohybov brány.
GR	Συναρμολογήστε το προφίλ τελειώματος που ταιριάζει στη γκαραζόπορτα (X). Σε περίπτωση που η πόρτα είναι απασφαλισμένη με τη διάταξη απασφάλισης ανάγκης, υπάρχει κίνδυνος λόγω μη πέδησης
ES	Montar el perfil de conexión (X) adecuado para la puerta. Con la puerta desbloqueada por emergencia existe peligro a causa de movimientos sin freno de la misma.
PT	Monte o perfil de ligação certo para o portão (X). Se o portão tiver sido desbloqueado de emergência, existe o perigo de ele se deslocar descontroladamente.
BG	Указание: Монтирайте подходящ за вратата свързващ профил за врата (X). При врати с аварийно деблокиране съществува опасност от неограничени движения на вратата.
HR	Montirajte vratima pripadajući priključni profil vrata (X). Kod vrata koja su otključana u nuždi postoji opasnost radi kretanja vrata bez kočenja.
RO	Montați profilul de racordare poartă (X) potrivit porții. În cazul porții deblocate de urgență există pericol datorat mişcărilor nefrânate ale porții.
AE	يتم تركيب مقطع توصيل البوابة (X) المناسب للبوابة. عندما تكون البوابة قد تم تحريرها في حالة طوارئ فإنه يوجد خطر من خلال الحركة غير المفرملة للبوابة

J

DE	Notentriegelung intern	**PL**	Otwieranie awaryjne wewnętrzne
GB	Internal emergency release	**SI**	Odpiranje v sili z notranje strani
FR	Déverrouillage de secours interne	**CZ**	Nouzové odblokování. Vnitřní
SE	Intern nödöppning	**SK**	Núdzové otvorenie interné
DA	Intern frikobling	**GR**	Απασφάλιση ανάγκης εσωτερικά
NO	Innvendig nødsperre	**ES**	Desbloqueo de emergencia interno
FI	Sisällä oleva hätävapautin	**PT**	Desbloqueio interno de emergência
NL	Noodontgrendeling intern	**BG**	Вътрешно аварийно деблокиране
IT	Sblocco di emergenza interno	**HR**	Otključavanje u nuždi od unutra
HU	Belső vészkireteszelő	**RO**	Deschiderea de siguranță internă
RU	Аварийное отпирающее устройство изнутри	**AE**	التحرير في حالات الطوارئ داخليا

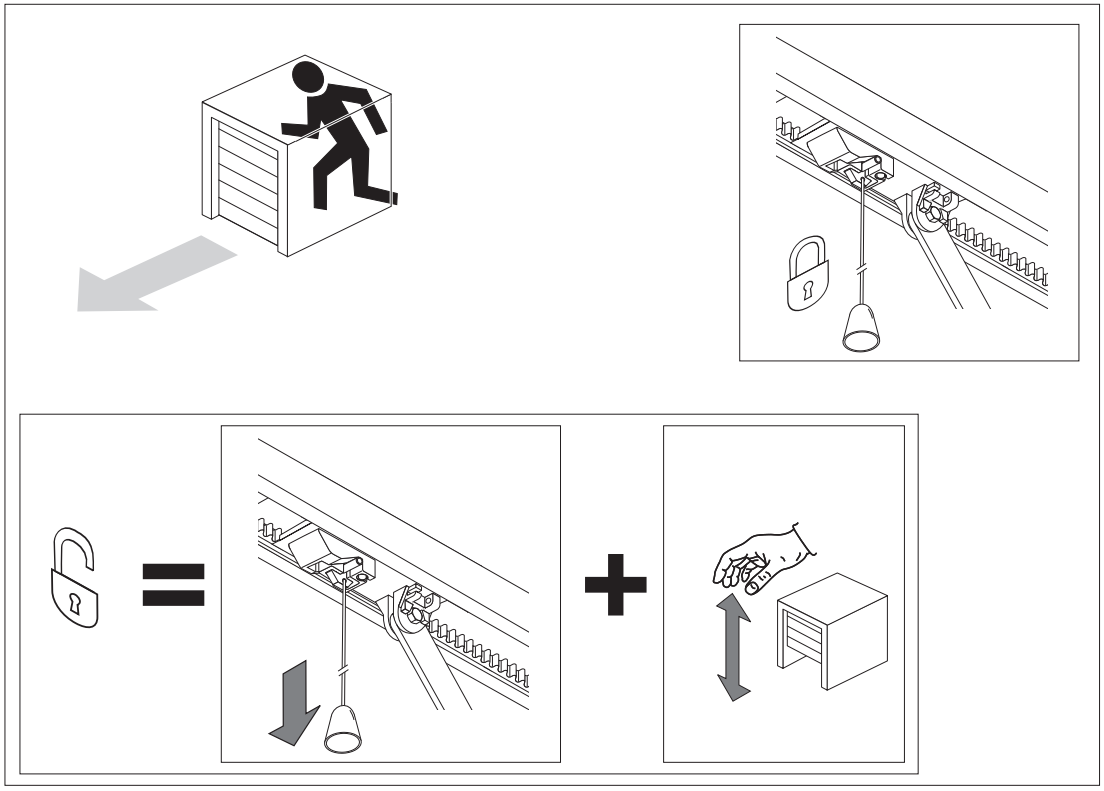

K

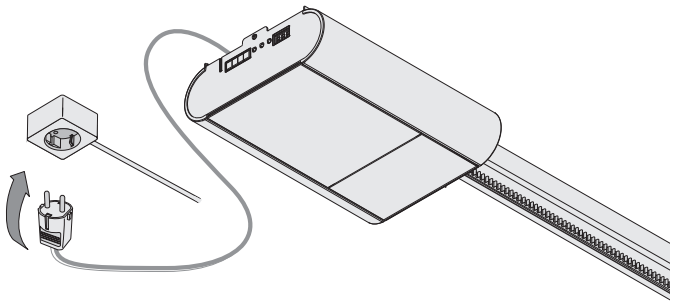

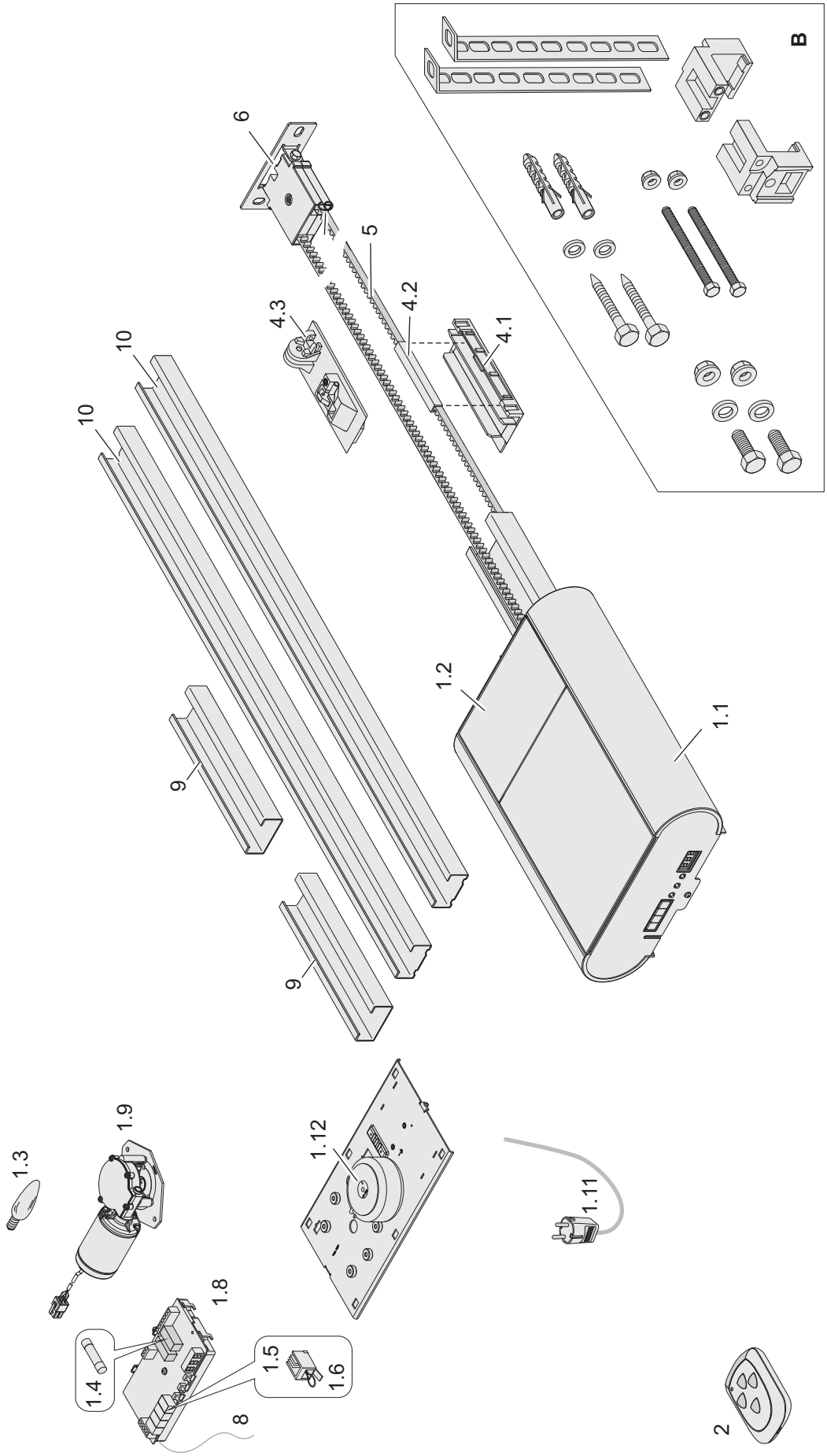
B
6
5
4.2
4.3
4.1
10
10
1.2
1.1
9
9
1.9
1.3
1.12
1.11
1.8
1.4
1.5
1.6
8
2

1.1			N000922-00-00
1.2			N000912-00-00
1.3			T90005
1.4			T14558
1.5 (Stopp)			T14743
1.6 (SE)			T14742
1.8			N000913
1.9 *			N001495-00-00
1.11 *		Schuko 1000 mm	N001415-00-00
		GB 1000 mm	N001415-00-02
		GB 5000 mm	N001415-00-03
		CH 1000 mm	N001415-00-01
1.12 *		Euro	T14597
		GB	T14888
2		NS	N000880-01-00
		CR	N000880-02-00
		HS	N000880-04-00
		IN	N000880-05-00
		NT	N000880-06-00
4.1			T14509
4.2			T14600
4.3			N000877-00-00
5	Gr.1	6480 mm	N001491-00-00
	Gr.2	8664 mm	N001492-00-00
	Gr.3	10840 mm	N001493-00-00
	Gr.4	15160 mm	N001494-00-00
6			N000907-00-00
8			T14579
9			T14529
10			T14572
B			T14526

DE Die mit * markierten Ersatzteile dürfen nur durch autorisiertes Fachpersonal gewechselt werden.

GB The spare parts marked with * may be exchanged only by authorised trained personnel.

FR Le remplacement des pièces de rechange signalées par * ne doit être effectué que par un personnel agréé.

SE De med * markerade reservdelarna får endast bytas av auktoriserat fackfolk.

DA De reservedele, som er markeret med *, må kun udskiftes af autoriseret fagpersonale.

NO Reservedeler som er merket med * må kun skiftes ut av autorisert fagpersonale.

FI Tähdellä * merkityt varaosat saa vaihtaa ainoastaan valtuutettu ammattihenkilöstö

NL De met * gemarkeerde reserveonderdelen mogen alleen door geautoriseerd vakpersoneel vervangen worden.

IT I ricambi contrassegnati con * possono essere sostituiti soltanto da personale specializzato autorizzato.

HU A csillaggal (*) jelölt pótalkatrészeket csak arra feljogosított szakszemélyzet cserélheti ki.

RU Отмеченные символом * запасные части разрешается заменять только авторизованным специалистам.

PL Części zamienne oznaczone * mogą być wymieniane tylko przez personel z odpowiednimi uprawnieniami zawodowymi.

SI Rezervne dele označene z * smejo zamenjati samo pooblaščeni strokovnjaki.

CZ Náhradní díly označené * smí vyměnit jen autorizovaný personál.

SK Náhradné diely označené * smie vymieňaž výhradne autorizovaný odborný personál.

GR Τα σημαδεμένα με έναν αστερίσκο (*) ανταλλακτικά εξαρτήματα επιτρέπεται να αντικατασταθούν μόνο από εξουσιοδοτημένο ειδικευμένο προσωπικό.

ES Las piezas de repuesto marcadas con * solamente las puede cambiar personal especializado y autorizado.

PT As peças sobressalentes assinaladas com * só podem ser substituídas por pessoal técnico autorizado.

BG Отбелязаните с * резервни части могат да се заменят само от упълномощени специалисти.

HR Mijenjanje sa * označenih rezervnih dijelova dopušteno je samo ovlaštenom stručnom osoblju.

RO Piesele de schimb marcate cu * pot fi schimbate doar de către personal de specialitate autorizat.

AE قطع الغيار المميزة بعلامة * لا يسمح بتغييرها إلا من قبل عمالة تقنية متخصصة معتمدة.

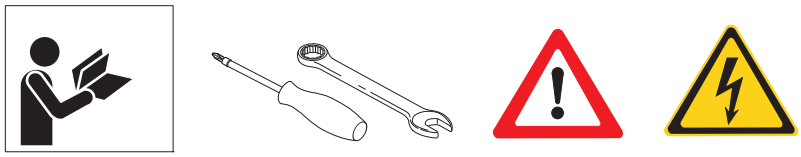

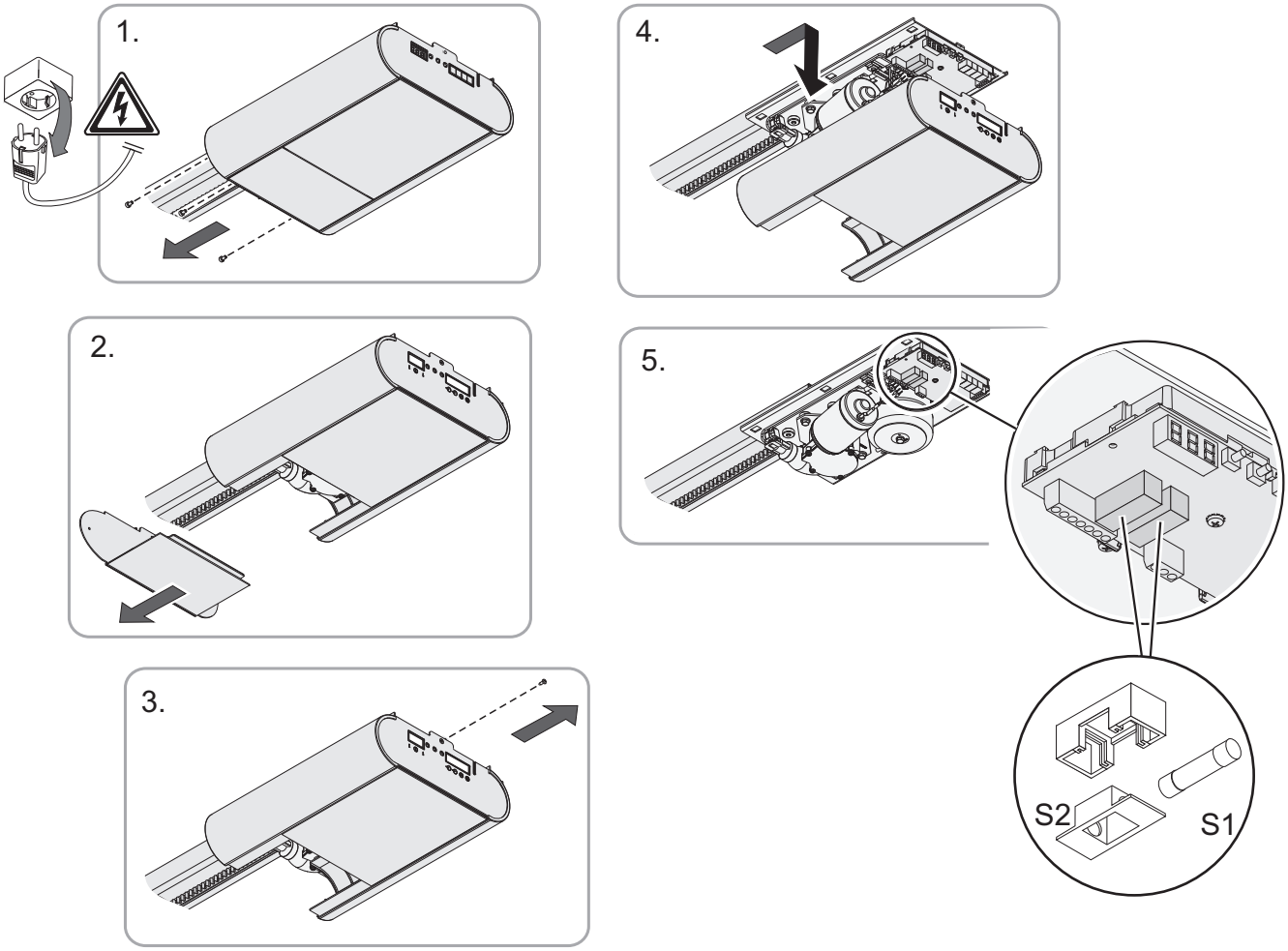
1.
2.
3.
4.
5.
S2
S1

EC-Declaration of Conformity

in accordance with the EC-Machinery Directive 2006/42/EG, Appendix II A

We,
Cardo Door Production GmbH
Normstahlstrasse 1-3
D-85368 Moosburg, Germany

hereby declare that the machinery described below complies in its design and construction and in the version marketed by us with the basic safety and health requirements of the EC Directive 2006/42/EG.

Product description

Function	Electrical garage door operator with radio remote control
Model	Magic
Type	Magic 1000

With following garage door types:
Euroclassic Iso - Euroframe alu - Euroframe copper - Euroframe wood - Euroline Iso - Eurostyle iso - Euroflair Iso - Eurotrend Iso - Eurotwin Iso - Castell - Elegant - Prominent-F - Klassik - Rustico - S-Castell - S-Elegant - S-Prominent-F - S-Klassik - S-Rustico - Prominent - Variant - S-Variant - Variant wood - S-Variant Wood - Classic - Style - Twenty - Topframe - Topclassic iso - Topframe Alu - Topframe Copper - Topflair Iso - Topframe Steel - Topframe wood - Topline Iso - Topstyle Iso - Toptrend Iso - Toptwin Iso - G60 Classic - G60 Style - G60 Trend - G60 Line - G60 Elipse - Euromax - G60 Max

Harmonised standards applied

DIN EN ISO 12100-1:2004-04	Safety of machinery – basic concepts, general principles for design – Part 1
DIN EN ISO 12100-2/A1:2009-10	Safety of machinery – basic concepts, general principles for design – Part 2
DIN EN ISO 13849-1:2008-12	Safety of machinery – Safety-related parts of control systems - Part 1
DIN EN 12445:2005-05	Industrial, commercial and garage doors and gates – Safety in use of power operated doors – Test methods
DIN EN 12453:2005-05	Industrial, commercial and garage doors and gates – Safety in use of power operated doors - Requirements
DIN EN 13241-1:2004-04	Industrial, commercial and garage doors and gates – Product standard – Products without fire resistance and smoke control characteristics

Other applied directives

Construction Products Directive 89/106/EWG	EMC 2004/108/EG
Low Voltage Directive 2006/95/EG	1999/5/EG R&TTE

The following tests were conducted by these approved bodies:

TÜV SÜD Product Service GmbH Reg. No. 063795 Ridlerstrasse 65 - D-80339 München, Germany	Mikes Reg. No. D-PL-12030-01-03 Ohmstrasse 2-4 - D-94342 Straßkirchen, Germany Test results (passed) - Safety requirements closing forces - Electrical safety - Mechanical requirements - Electromagnetic compatibility

Person authorised to collect the technical documents: Herbert Dust, address see above.

Wolfgang Schulz, Managing Director
Moosburg, 01.12.10

Declaration of incorporation

We,

Cardo Door Production GmbH
Normstahlstrasse 1-3
D-85368 Moosburg, Germany

hereby declare that we have applied and complied with the following basic requirements of the EC Directive 2006/42/EG in the design and manufacture of the partially completed machinery described below: 1.1.2, 1.1.3, 1.2.1, 1.2.3, 1.2.4, 1.2.6, 1.3.2, 1.3.4, 1.5.1, 1.5.2, 1.5.3, 1.5.8, 1.5.9, 1.5.10, 1.5.11, 1.5.9, 1.6.3, 1.7.3, 1.7.4

The special technical documents have been compiled in accordance with Appendix VII Part B of the EC Directive 2006/42/EG. We undertake to submit these in electronic form to the market supervisory authorities upon demand within a reasonable time.

Description of the partially completed machinery

Function	Electrical garage door operator with radio remote control
Model	Magic
Type	Magic 1000

Harmonised standards applied

DIN EN ISO 12100-1:2004-04	Safety of machinery – basic concepts, general principles for design – Part 1
DIN EN ISO 12100-2/A1:2009-10	Safety of machinery – basic concepts, general principles for design – Part 2
DIN EN ISO 13849-1:2008-12	Safety of machinery – Safety-related parts of control systems - Part 1
DIN EN 13241-1:2004-04	Industrial, commercial and garage doors and gates – Product standard – Products without fire resistance and smoke control characteristics

Other applied directives

Construction Products Directive 89/106/EWG	EMC 2004/108/EG
Low Voltage Directive 2006/95/EG	1999/5/EG R&TTE

The following tests were conducted by these approved bodies:

TÜV SÜD Product Service GmbH Reg. No. 063795 Ridlerstrasse 65 - D-80339 München, Germany	Mikes Reg. No. D-PL-12030-01-03 Ohmstrasse 2-4 - D-94342 Straßkirchen, Germany Test results (passed) - Safety requirements closing forces - Electrical safety - Mechanical requirements - Electromagnetic compatibility

The partially completed machinery may not be put into operation until it has been determined that the machinery into which the partially completed machinery is to be installed complies with the regulations of the Machinery Directive.

Wolfgang Schulz, Managing Director
Moosburg, 01.12.10