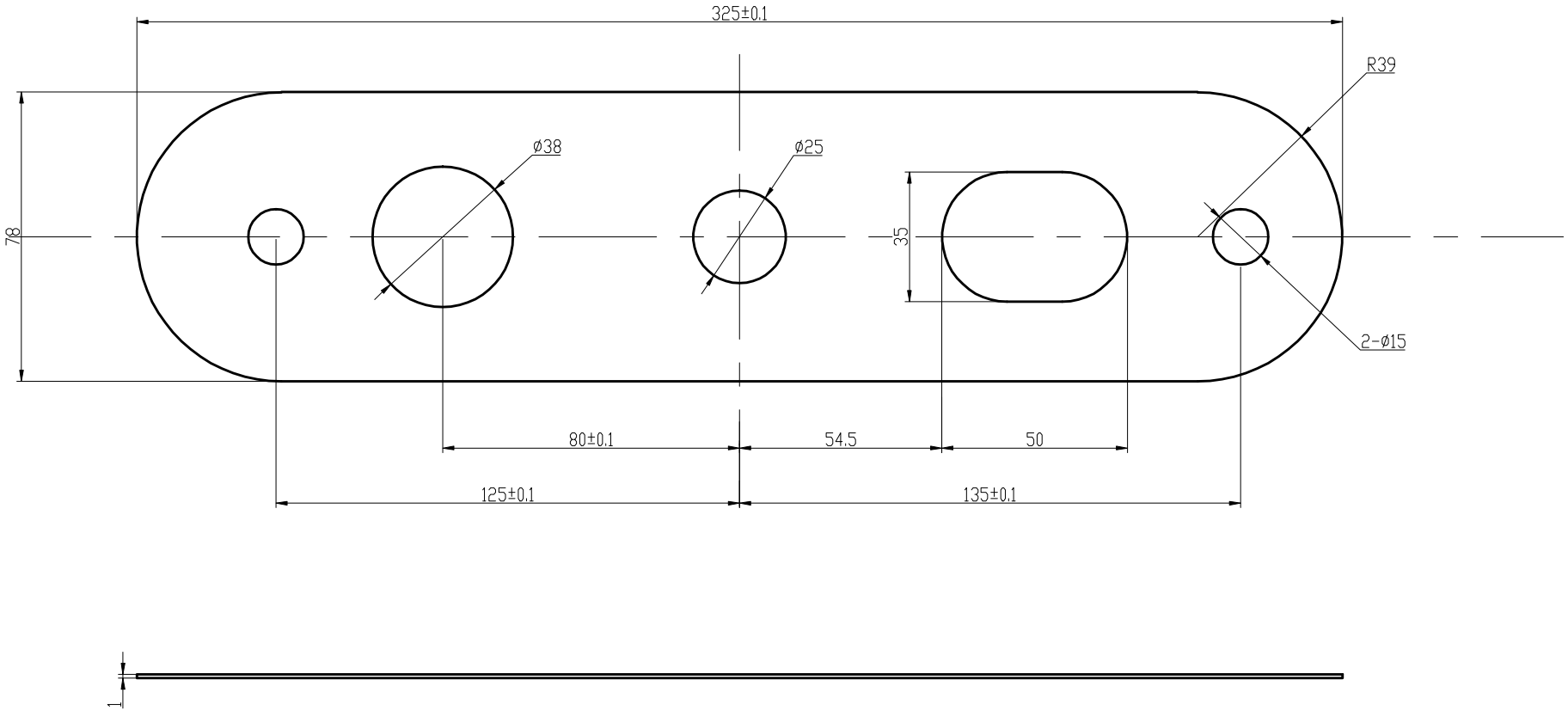
325±0.1
R39
ø38
ø25
78
35
2-ø15
80±0.1
54.5
50
125±0.1
135±0.1
1