DeepL
Subscribe to DeepL Pro to translate larger documents.
Visit www.DeepL.com/pro for more information.

REMOCON

CATALOG
CONTROL OF ACCESS CONTROL

v.1.0

NEW

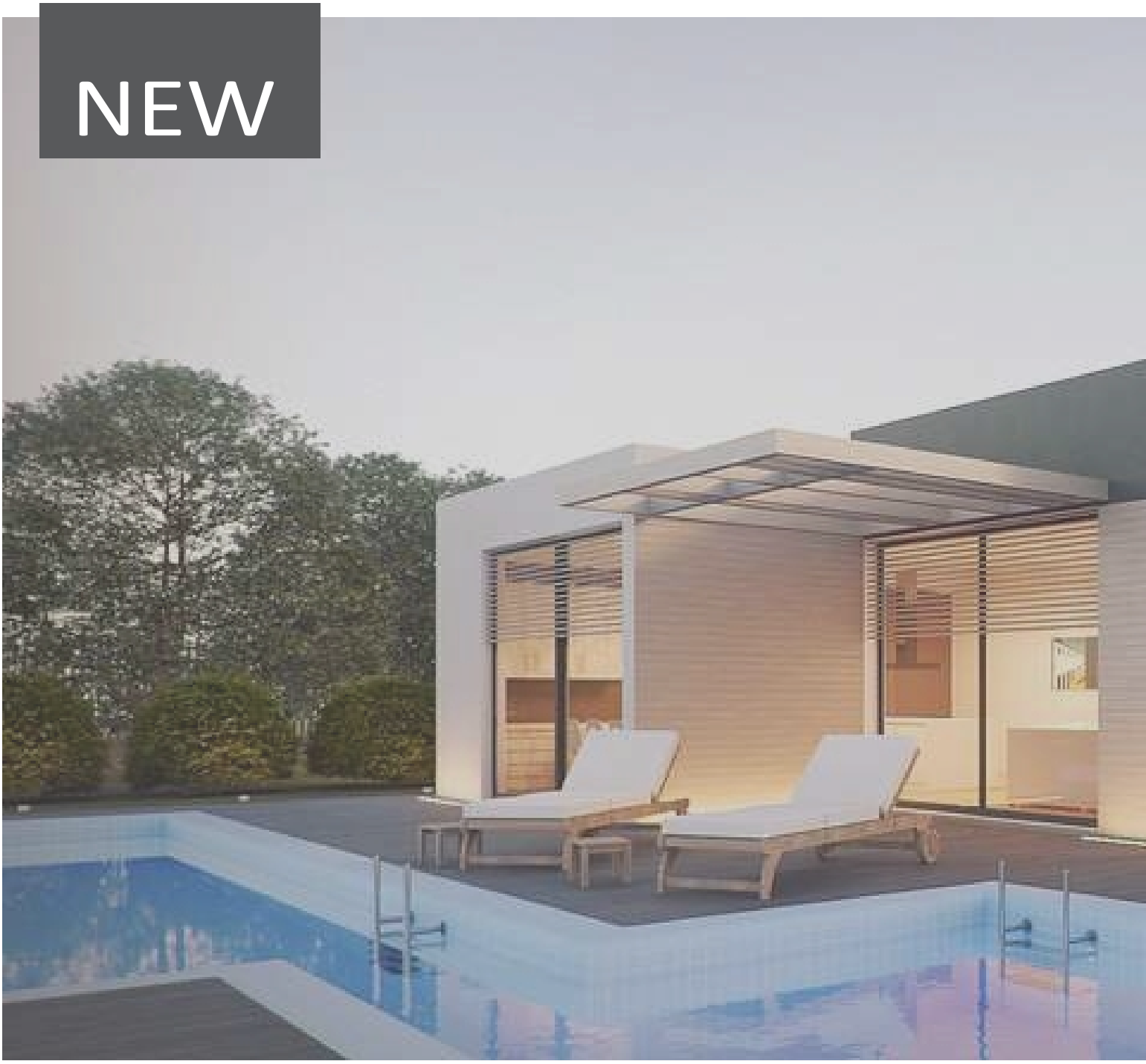

GENERAL INDEX

Electronic Handle	pg. 4
Electronic Handle without Fingerprint	pg. 8
Electronic Cylinder	p. 10
Wall Reader	p. 14
Bluetooth Module	pg. 18
Accessories	p. 22

ELECTRONIC HANDLE

Electronic handle

Ref. MEHTPB-MT35
MEHTPB-MT50
MEHTPB-MD50
MEHTPB-MD60
MEHTPB-MD60

Specifications

• Full control through: Wi-Fi (it is necessary to install a WiFi gateway), bluetooth APP, biometric fingerprint, proximity card, numeric code.

• Door thickness: from 30mm to 80mm.

• Working voltage: 6V (4 batteries type AAA 1,5V).

• Material: Stainless steel 304.

• Card type: Mifare 13.56 MHz.

• Working temperature: -20ºC - 70ºC

• Humidity: 10-95% - IP rating: IP55

• Battery life: Approximately 10,000 opening / closing operations of the mechanism. Resetting without disassembling the lock.

• Available languages: Spanish, English, French, Portuguese...

• FREE APP: Android and IOS.

• Applications: Residences, Apartments,Offices, Hotels. (need management software), AirBNB, Shops, Gyms, ...

*Hotel management software available.

FINISHES AVAILABLE

Stainless steel Gold* Gold* Black* Black* Black* Black* Black* Black* Black* Black* Black* Black Black* Black* Black* Black* Black* Black* Black* Black* Black* Black* Black* Black*

* Finishes upon request

(Tlf.) (+34) (952) (34)(06) (60)
(Dept.) (Technical)
678 64 32 00

Technical Characteristics

Material: Galvanized steel sheet

Material front: Stainless steel SUS304

Nut material: Stainless steel SUS304

Anti-card: YES Reversible:

YES Anti-panic: YES

Anti-panic function: By turning the inner handle, the door opens even if the mechanical/electronic privacy is activated.

Wheelbase: 72/85 mm (depending on model)

Entry: 60/50/35 (depending on model). Code

Capacity: Up to 20,000 users Backlit Panel

Estimated battery life: 3 years in standby mode.

Consumption: 20µA in stand-by mode

Can be installed on door widths from 33 mm Security opening via Micro USB power supply and with key.

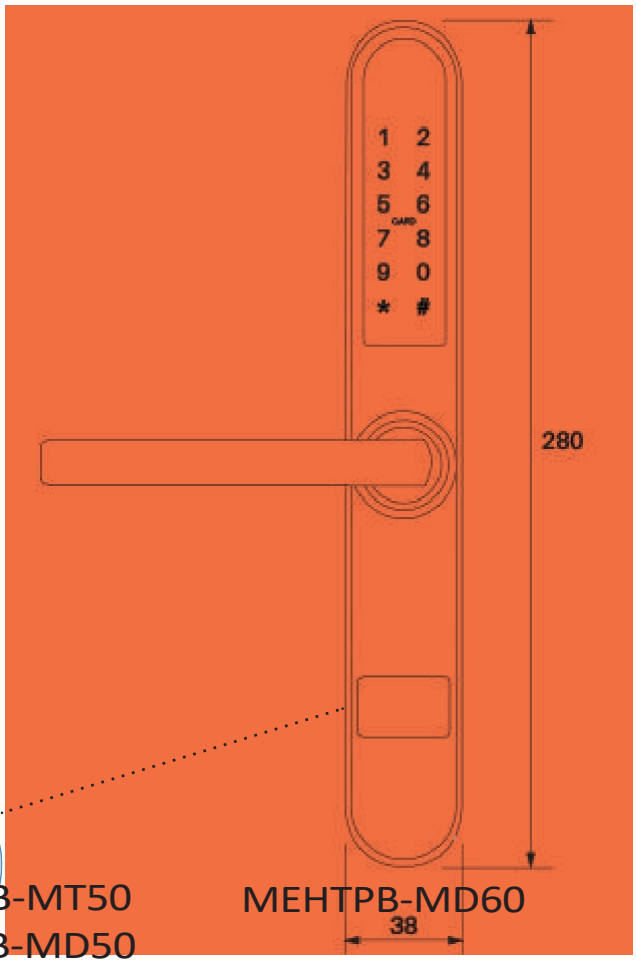

Lock Reversible panic lock supplied

Ref. MEHTPB-MT35

Ref. MEHTPB-MT50
MEHTPB-MD50

MEHTPB-MD60

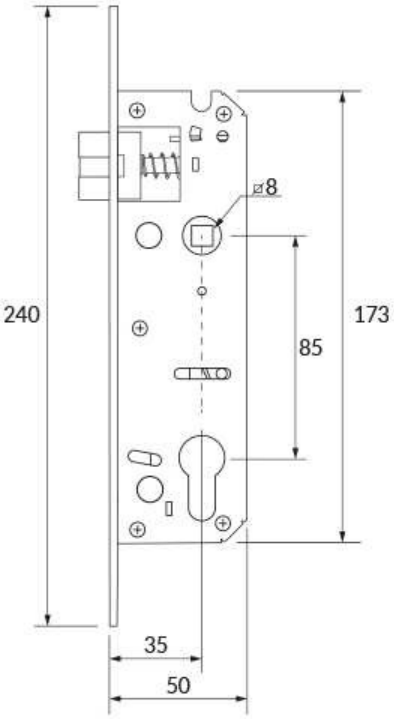

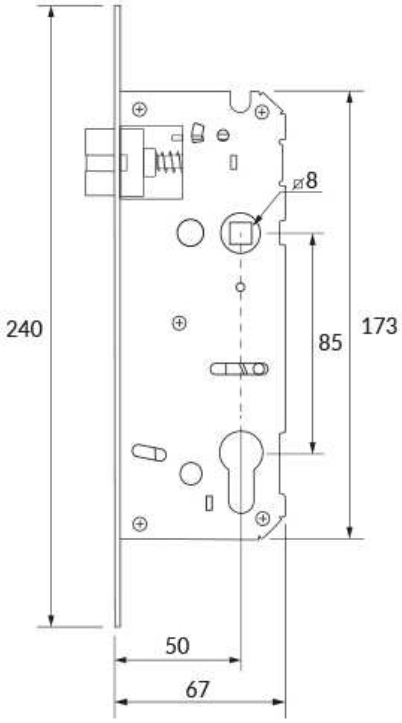

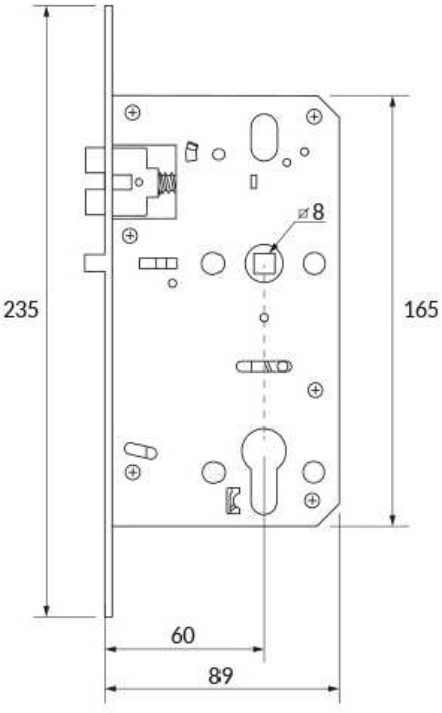

Electronic handle WITHOUT fingerprint

Ref. METPB-MT35
METPB-MT50
METPB-MD50
METPB-MD60
METPB-MD60

Specifications

- Complete control through: Wi-Fi (it is necessary to install a WiFi gateway), bluetooth APP, proximity card, numerical code.
- Door thickness: between 30mm. to 80mm.
- Working voltage: 6V (4 batteries type AAA 1,5V).
- Material: Stainless steel 304.
- Card type: Mifare 13,56 MHz.
- Working Temperature: -20ºC - 70ºC.
- Humidity: 10-95% - IP Rating: IP55
- Battery life: Approximately 10,000 opening / closing operations of the mechanism. Resetting without disassembling the lock.
- Available languages: English, Spanish, French, Portuguese, French, Portuguese...
- FREE APP: Android and IOS
- Applications: Residences, Apartments,Offices, Hotels.
  (need management software), AirBNB, Shops,
  Gyms, ...

*Hotel management software available.

FINISHES AVAILABLE

Stainless steel Gold* Gold* Black* Black* Black* Black* Black* Black* Black* Black* Black* Black Black* Black* Black* Black* Black* Black* Blac
Black* Black* Black* Black

* Finishes upon request

Technical Characteristics

Material: Galvanized steel sheet

Material front: Stainless steel SUS304

Nut material: Stainless steel SUS304

Anti-card: YES Reversible:

YES Anti-panic: YES

Anti-panic function: By turning the inner handle, the door opens even if the mechanical/electronic privacy is activated.

Wheelbase: 72/85 mm (depending on model)

Entry: 60/50/35 (depending on model). Code capacity: Up to 20,000 users Backlit Panel

Estimated battery life: 3 years in standby mode

Consumption: 20µA in standby mode

Can be installed on door widths from 33 mm Security opening via Micro USB power supply and with key.

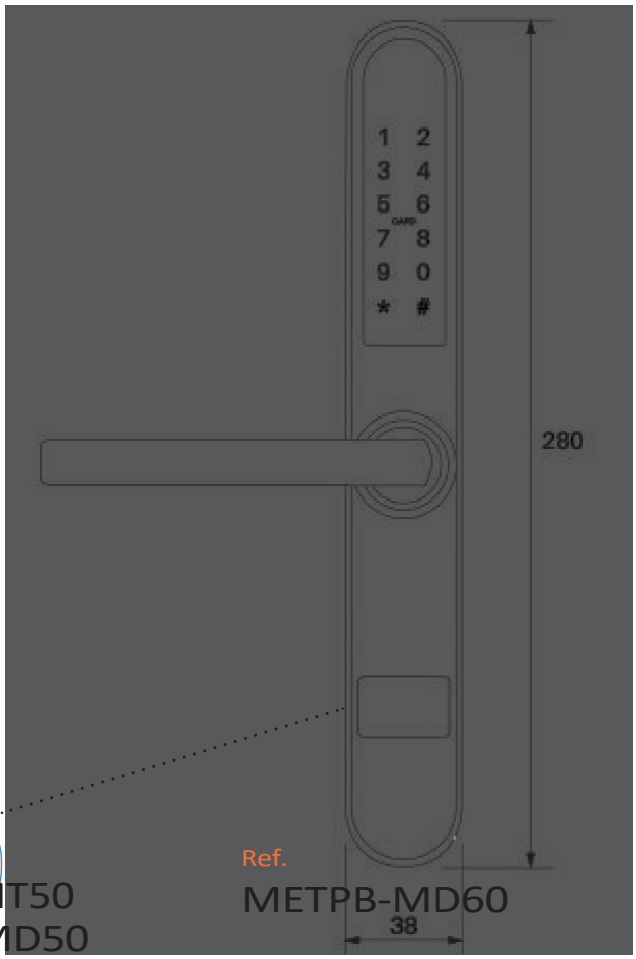

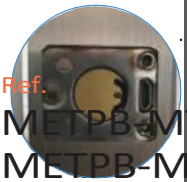

Lock	Ref.	Ref.	Ref.
Reversible panic lock supplied	METPB-MT35	METPB-MT50 METPB-MD50 METPB-MD50	METPB-MD60

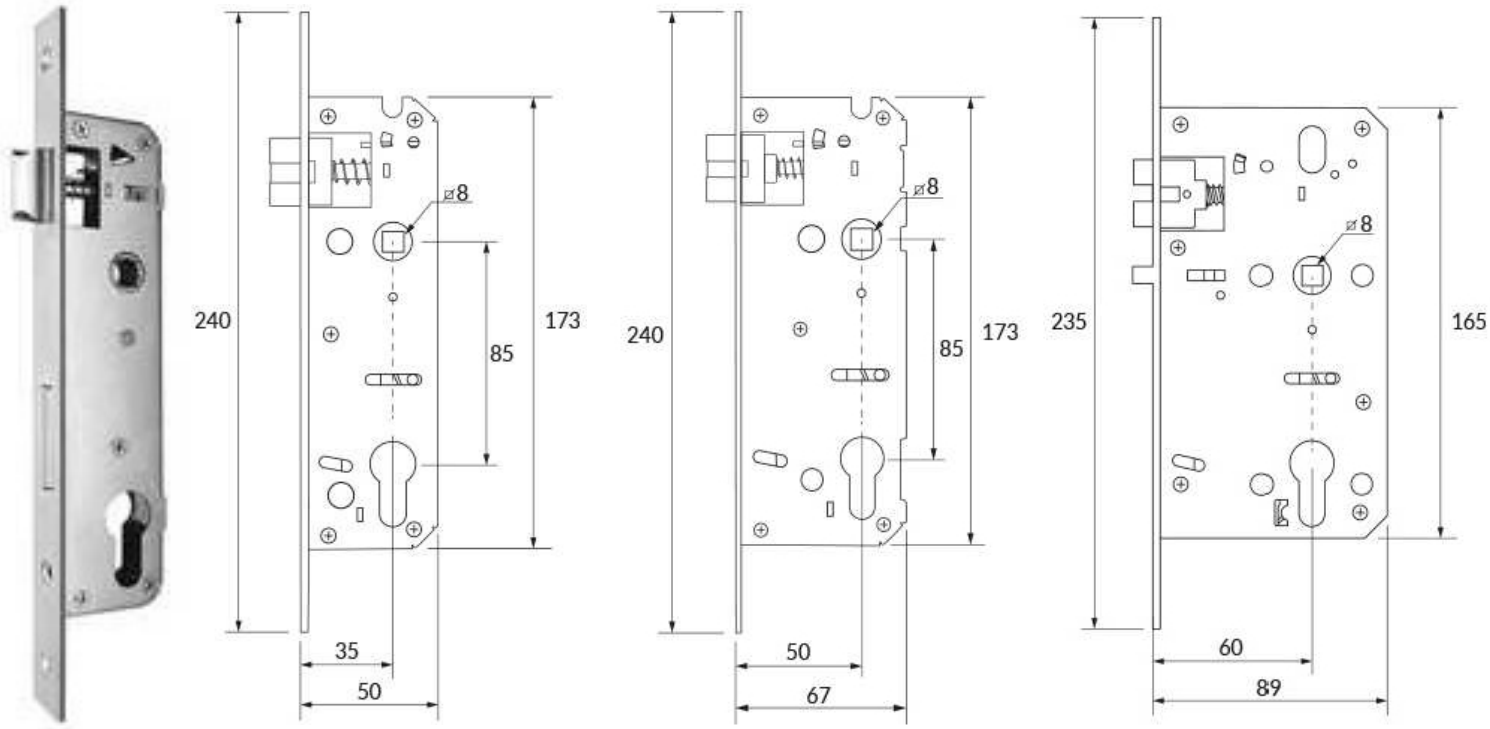

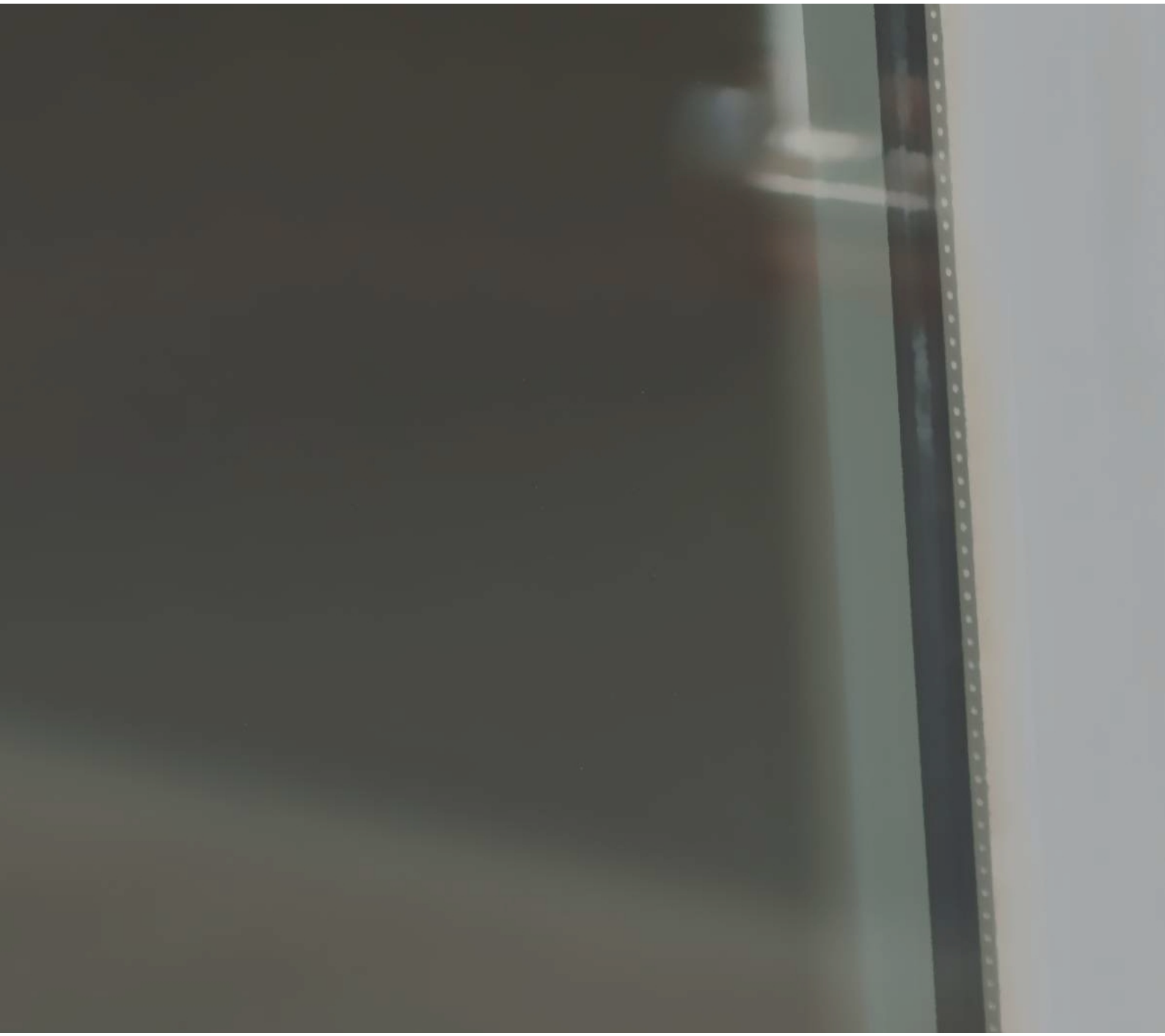

ELECTRONIC CYLINDER

Electronic cylinder

Ref. CIEL3030NP
CIEL3535NP
CIEL4040NP
CIEL6040NP
CIEL6040NP

Specifications

• Complete control through: Wi-Fi (it is necessary to install a WiFi "Gateway" link point), bluetooth APP, proximity card, numerical code.

• Door thickness: between 60mm. and 125mm.

• Working voltage: 4.5V (3 batteries type AAA 1,) NOT INCLUDED.

• Material: Zinc alloy steel

• Card type: Mifare 13,56 MHz.

• Working Temperature: -20ºC - 70ºC

• Humidity: 10-95%.

• IP Rating: IP44

• Battery life: Approximately 10,000 opening / closing operations of the mechanism.

• Available languages: Spanish, English, French, French, Portuguese...

• FREE APP: Android and IOS

• Applications: Residences, Apartments,Offices, Hotels. (need management software), AirBNB, Shops, Gyms, ...

*Hotel management software available.

FINISHES AVAILABLE

Nickel

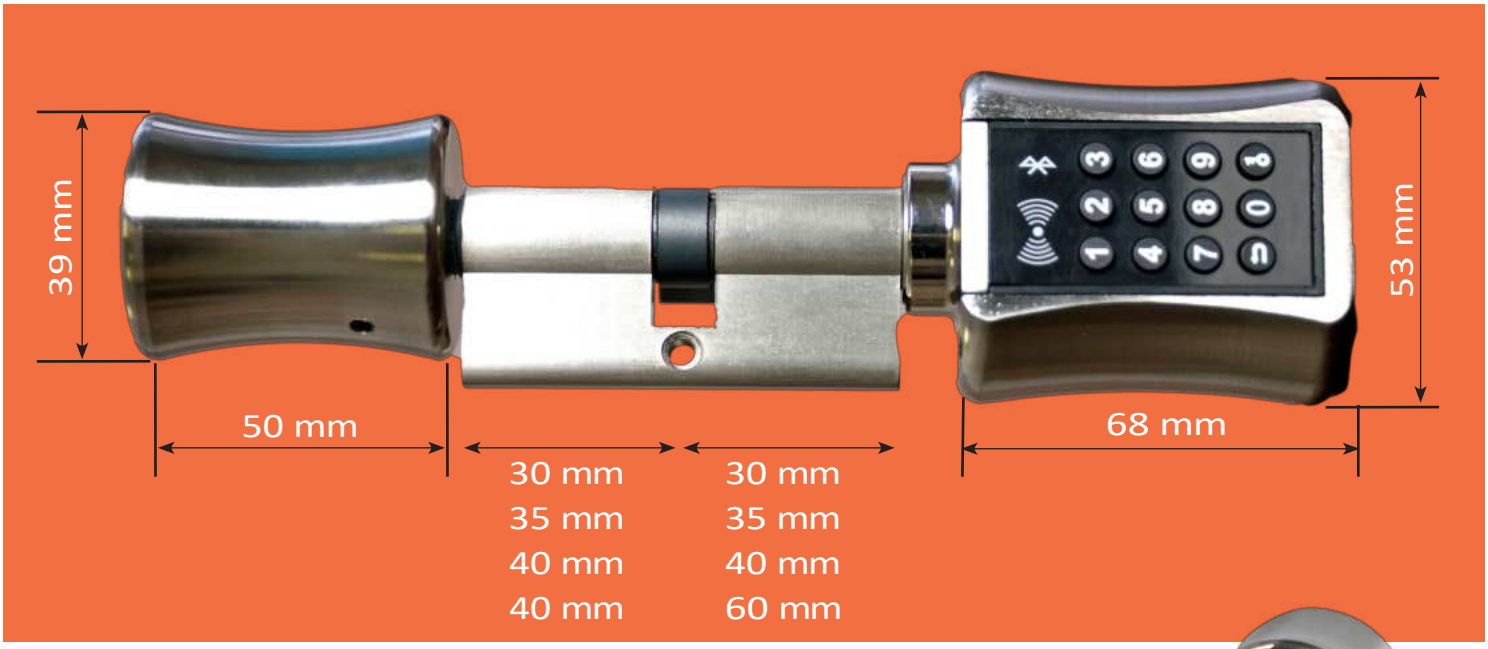

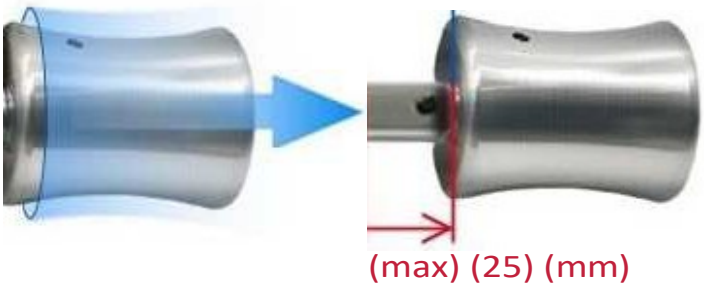

Internal knob sliding up to 25 mm (max.)

Safety opening through
Micro USB power supply or with
uncopyable key (2 supplied)

Technical features

Reader Module

- Technology of identi的椀cación 13,5MHz. with RFID chip without contact.
- Low power consumption.
- Reading distance: 2-4 cm. for RF cards.

Control Module

- Volatile memory.
- Up to 20,000 users.
- Different warning signals: low battery level, authorized access, access denied, privacy activated, door locked, etc.
- Protocol: Mifare 13,5MHz.

Locking mechanism

- The motorized clutch activates the outer knob. When the door is closed, the inner rotor turns freely.

Battery module

- 3 AAA type batteries LR03 1,5v.
- Estimated life: 3 years in standby mode.
- Consumption: 20µA in standby mode.
- Batteries can be easily changed without disassembling the cylinder.

WALL READER

1 2 3
4 5 6
7 8 9
* 0 #
TTLock
Administrador autorizado
Enviar eKey
Enviar código de
eKeys
Contraseñas
Tarjetas RF
Huellas dactilares
Registros
Configuración

Wall reader

Ref. CAMTPB

Specifications

Numerical keypad suitable for any type of door with electric lock or electric strike.
Our CAMTPB keypad is the solution for most restricted areas.
A variety of credentials can be used to control access:

- Password up to 8 digits
- Proximity Card using Mifare 13.5MHz protocol
- From smartphone using the TTLock app available for free for IOS and Android :
  - via Bluetooth
  - via WiFi . In this case it is necessary to install a WiFi "Gateway" link point.

From the APP the access can be managed 100% :

- Access management in real time . The access period can be permanent, temporary, cyclic or single-use.
- Event log: who entered, how and at what time.
- Remote Control

FINISHES AVAILABLE

Stainless steel

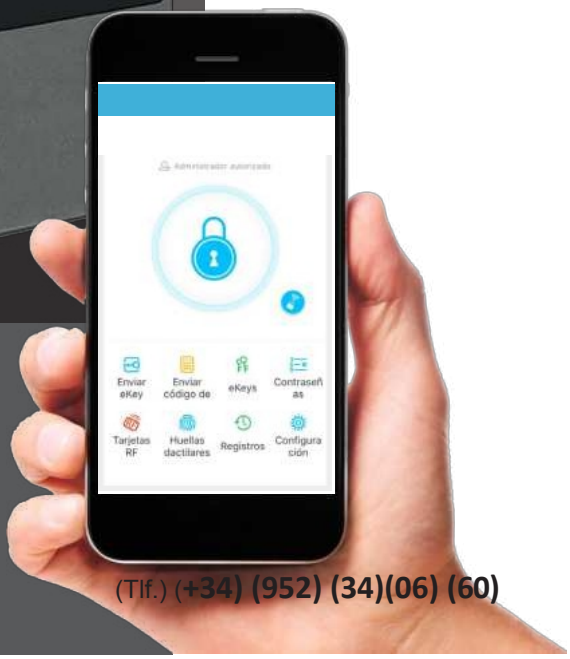

Technical Characteristics

Material: Aluminum (body).

Front material: Tempered glass panel.

Communication: Bluetooth 4.1

Supported Systems: Android 4.3 / IOS 7.0 or higher.

Power supply: 220 V.

Output: 12 V.

IP Protection: P 66. Users:

Up to 20,000 Protocol:

Mifare 13.5 MHz

• Applications: Residences, Apartments,Offices, Hotels (need management software), AirBNB,Shops, Gyms, ...

*Hotel management software available.

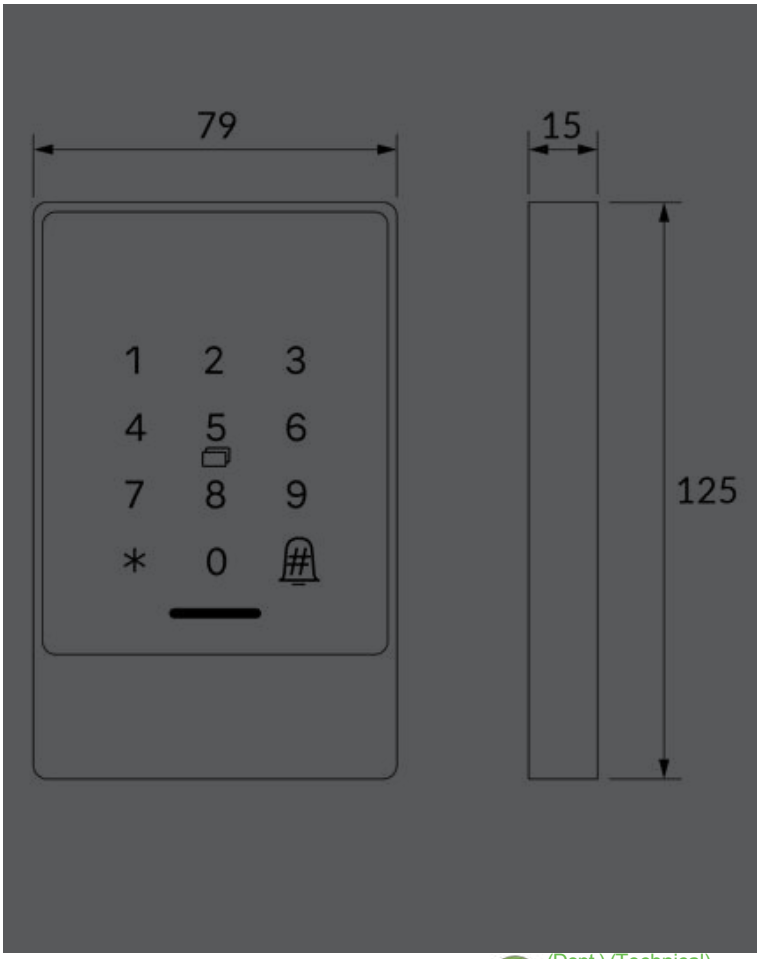

BLUETOOTH MODULE

Bluetooth module

Ref. RSTRBL

Specifications

Bluetooth module suitable for any type of door equipped with electro-lock, electric lock or motor; our **RSTRBL** module is easy to install and is the perfect solution for most restricted areas.

The access can be done from smartphone using the application **TTLock** available for free for IOS and Android :

- via Bluetooth
- via WiFi . In this case it is necessary to install a WiFi gateway.

From the APP access can be managed 100%:

- Access management in real time . The access period can be permanent, temporary, cyclic or one-time use.
- Event log : who entered and at what time.
- Remote Control

The administrator is the owner of the module. Only the administrator can manage it.

You can also assign authorized administrators who will have access to the con盼椀guración of the device.

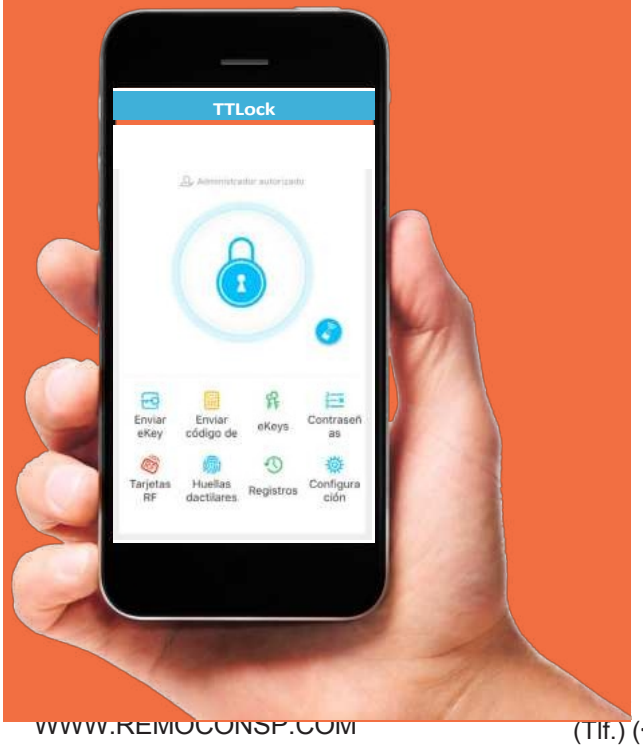

Technical Characteristics

Connection type: Pluggable 6 pins
Interface: Bluetooth 4.0
Communication: Bluetooth or wi-fi (WiFi hotspot required)
Users: Up to 20,000
Dimensions: 64x36mm

For its use it is necessary to have a control panel or receiving base equipped with a 6-pin socket.

Management Software

- Software - App of management for the STAFF of the hotel.
- Software - App exclusively for hotel GUESTS.
- Status and type of room.
- Check in and check out according to room status.
- Multiple interchangeable unlocking methods from the software and app.
- Possibility of reserved areas.
- Access time management.
- Collection of records with the app and possibility to search them in the PC or in the APP.
- Device management.

Card reader / encoder

Ref. LELLPME

Card reader and decoder unit. Supports different types of cards.

- Mifare S50 protocol.
- Radio frequency 13.56MHz.
- Power supply: Usb type C.
- Power 5V/500mA
- Measures: 70 x 70 x 26 mm

Card

Ref. LLPMEHTPB

13.56 MHz Mifare proximity cards 13.56 MHz RFID technology
Works with all our products that incorporate the Mifare proximity reader:

- MEHTPB electronic handle
- Electronic cylinder CIEL
- CAMTPB wall reader

Protection rating: IP68 Reduced
size : 50 x 30 mm

WiFi hotspot

Ref. PEWBME

The WiFi gateway, also called Gateway, is suitable for our electronic handle, electronic cylinder, wall reader and bluetooth module.

It is used together with the TTLock application, available FREE for IOS and Android.

Thanks to the WiFi hotspot, the smart lock (electronic handle, electronic cylinder or wall reader) can be unlocked / locked remotely by connecting to the TTLock application; this already provides a wider unlocking distance than that offered by Bluetooth.

At the same time, it allows :
- modify and delete eKey/Password/IC card at any time and in any location
- real-time monitoring of door lock status, battery life and operating logs.

An unlimited number of smart locks can be paired to the WiFi hotspot as long as they are within range.

It is recommended that the distance between the WiFi hotspot and the integrated lock (electronic handle, electronic cylinder or wall reader) does not exceed 100 meters, otherwise connectivity will be affected.

Oval handle trim

Ref. EMBMEHTPB

* handle not included

Oval trim for MEHTPB electronic handle INOX 304 Finish

Sizes 325x78 mm

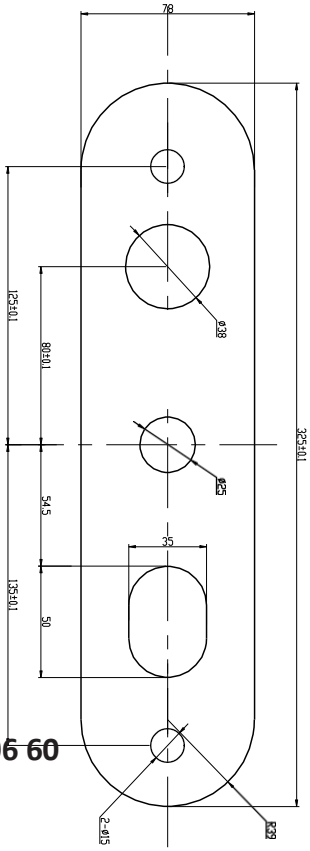

With more than 30 experts at your service

WE CONNECT WITH YOU

RemoconSP

REMOCON_SPAIN

RemoconSP

remoconsp

Technical Dept.
678 64 32 00

info@remoconsp.com

CENTRAL Málaga

C/Ignacio Aldecoa nº15
P.I.Guadalhorce 29004 - Málaga